Toyota Genuine Audio

INSTALLATION INSTRUCTIONS

FOR

Avensis Verso (RHD)

****M2*R**

TABLE OF CONTENTS

1. Application Chart 4

2. System Layout 12

3. Combo / Add on Unit Installation 14
   3.1 Vehicle Disassembly 14
   3.2 1DIN Audio Installation 15
   3.3 1.4DIN Audio Installation 16
   3.4 Wide-2DIN Audio Installation 17

4. CD-, MD-Changer and Subwoofer Installation 18
   4.1 Vehicle Disassembly 18
      4.1.1 In case of Installation under the Passenger's Seat 18
      4.1.2 In case of Installation in the Luggage Area 20
   4.2 CD- and MD-Changer Installation 25
      4.2.1 Hanging under the Passenger's Seat 25
      4.2.2 In the Luggage Area 33
   4.3 Subwoofer Installation 40
      4.3.1 Hanging under the Passenger's Seat 40

5. Outside Temperature Sensor Installation 45

PRELIMINARY

AUDIO APPLICATION CHART

TMME-CS Division Dev. Dept. - July 10th, 2001

Avensis Verso **M2*R (RHD)

		COMBINATION	HEAD UNIT	+ ADD-ON UNIT(S): In-Dash CD-Changer TM0561 (08601-00907)	Green 0.6 CD-Changer (08601-00913)	Green 0.6 CD-Deck (08601-00908)	Hide Away CD-Changer TM0461 (08601-00911)	Seat Mounting CD-Changer TM0461 (08601-00912)	MD-Changer TM0660 (08601-00900)	REQUIRED ADDITIONAL PARTS
1.4DIN Head-Unit	1	Radio/Cassette (only)	08600-00963 (green)							Cover-Plate (55522-42010)
	2	CD-Tuner (only)	08600-00965 (green)							Cover-Plate (55522-42010)
	3	Radio/Cassette + CD-Deck	08600-00963 (green)	●						-
	4	Radio/Cassette + CD-Changer	08600-00963 (green)				●(2)			Cover-Plate (55522-42010)
			08600-00963 (green)					●(3)		Cover-Plate (55522-42010) + F/K (08695-00803)
			08600-00963 (green)		●					-
	5	Radio/Cassette + MD-Changer	08600-00963 (green)						●	Cover-Plate (55522-42010) + F/K (08695-00803) (3)
	6	CD-Tuner + CD-Changer	08600-00965 (green)				●(2)			Cover-Plate (55522-42010)
			08600-00965 (green)					●(3)		Cover-Plate (55522-42010) + F/K (08695-00803)
			08600-00965 (green)		●					-
	7	CD-Tuner + MD-Changer	08600-00965 (green)						●	Cover-Plate (55522-42010) + F/K (08695-00803) (3)

PRELIMINARY

08695-00803 = Hanging Seat Mounting Kit • Note (1) : Outside temperature sensor optional • Note (2) : Luggage area mounting • Note (3) : Passenger seat mounting

AUDIO APPLICATION CHART

TMME-CS Division Dev. Dept. - July 10th, 2001

Avensis Verso **M2*R (RHD)

		COMBINATION	HEAD UNIT	+ ADD-ON UNIT(S): Seat Mounting CD-Changer TM0461 (08601-00912)	Hide Away CD-Changer TM0461 (08601-00911)	In-Dash CD-Changer TM0561 (08601-00907)	CD-Deck TF0411 (08601-00906)	Cassette-Deck TM0300 (08690-00827)	MD-Changer TM0660 (08601-00900)	Navigation System TNS500 (08545-00803)	Navigation System TNS200 (08545-00802)	Cassette-Storage PZ437-90342-00 or CD-Storage PZ437-90341-00	REQUIRED ADDITIONAL PARTS
1DIN Head-Unit	1	Radio/Cassette (only)	TF4301 (08600-00922)										A-box (55521-16030)
			TM4201 (08600-00934)										A-box (55521-16030)
			TP4000 (08600-00933)										A-box (55521-16030)
			TF2002 (08600-00920)										A-box (55521-16030)
			TM2003 (08600-00932)										A-box (55521-16030)
	2	CD-Tuner (only)	TM4412 (08600-00922)										A-box (55521-16030)
			TM4414 (08600-00936)										A-box (55521-16030)
	3	Radio/Cassette + Cassette storage	TF4301 (08600-00922)									●	-
			TM4201 (08600-00934)									●	-
			TP4000 (08600-00933)									●	-
			TF2002 (08600-00920)									●	-
			TM2003 (08600-00932)									●	-
	4	Radio/Cassette + CD-Deck	TF4301 (08600-00922)				●						-
			TM4201 (08600-00934)				●						-
	5	Radio/Cassette + CD-Changer	TF4301 (08600-00922)			●(2)							A-box (55521-16030)
			TF4301 (08600-00922)					●(3)					A-box (55521-16030) + F/K (08695-00803)
			TM4201 (08600-00934)			●(2)							A-box (55521-16030)
			TM4201 (08600-00934)					●(3)					A-box (55521-16030) + F/K (08695-00803)

PRELIMINARY

08695-00803 = Hanging Seat Mounting Kit • Note (1) : Outside temperature sensor optional • Note (2) : Luggage area mounting • Note (3) : Passenger seat mounting

AUDIO APPLICATION CHART

TMME-CS Division Dev. Dept. - July 10th, 2001

Avensis Verso **M2*R (RHD)

		COMBINATION	HEAD UNIT	+ ADD-ON UNIT(S): Seat Mounting CD-Changer TM0461 (08601-00912)	Hide Away CD-Changer TM0461 (08601-00911)	In-Dash CD-Changer TM0561 (08601-00907)	CD-Deck TF0411 (08601-00906)	Cassette-Deck TM0300 (08690-00827)	MD-Changer TM0660 (08601-00900)	Navigation System TNS500 (08545-00803)	Navigation System TNS200 (08545-00802)	Cassette-Storage PZ437-90342-00 or CD-Storage PZ437-90341-00	REQUIRED ADDITIONAL PARTS
1DIN Head-Unit	6	Radio/Cassette + In dash CD-Changer	TF4301 (08600-00922)			●							-
			TM4201 (08600-00934)			●							-
	7	Radio/Cassette + MD-Changer	TF4301 (08600-00922)						●				A-box (55521-16030) + F/K (08695-00803) (3)
			TM4201 (08600-00934)						●				A-box (55521-16030) + F/K (08695-00803) (3)
	8	Radio/Cassette + Full Map Navigation	TF4301 (08600-00922)							●			-
			TM4201 (08600-00934)							●			-
	9	Radio/Cassette + CD-Deck + CD-Changer	TF4301 (08600-00922)	●			●(2)						-
			TF4301 (08600-00922)	●				●(3)					F/K (08695-00803)
	10	Radio/Cassette + CD-Deck + MD-Changer	TF4301 (08600-00922)	●					●				F/K (08695-00803) (3)
	11	Radio/Cassette + CD-Changer CD/Cass-storage	TF4301 (08600-00922)				●(2)					●	-
			TF4301 (08600-00922)					●(3)				●	F/K (08695-00803)
			TM4201 (08600-00934)				●(2)					●	-
			TM4201 (08600-00934)					●(3)				●	F/K (08695-00803)
	12	Radio/Cassette + CD-Changer + MD-Changer	TF4301 (08600-00922)					●(3)	●(2)				A-box (55521-16030) + F/K (08695-00803)

PRELIMINARY

08695-00803 = Hanging Seat Mounting Kit • Note (1) : Outside temperature sensor optional • Note (2) : Luggage area mounting • Note (3) : Passenger seat mounting

AUDIO APPLICATION CHART

TMME-CS Division Dev. Dept. - July 10th, 2001

Avensis Verso **M2*R

(RHD)

		COMBINATION	HEAD UNIT	Seat Mounting CD-Changer TM0461 (08601-00912)	Hide Away CD-Changer TM0461 (08601-00911)	In-Dash CD-Changer TM0561 (08601-00907)	CD-Deck TF0411 (08601-00906)	Cassette-Deck TM0300 (08690-00827)	MD-Changer TM0660 (08601-00900)	Navigation System TNS500 (08545-00803)	Navigation System TNS200 (08545-00802)	Cassette-Storage PZ437-90342-00 or CD-Storage PZ437-90341-00	REQUIRED ADDITIONAL PARTS
				+ ADD-ON UNIT(S)									
1DIN Head-Unit	13	Radio/Cassette + CD-Changer + MD-Changer+CD/Cass-storage	TF4301 (08600-00922)				●(3)		●(2)			●	F/K (08695-00803)
	14	Radio/Cassette + CD-Changer + Full Map Navigation	TF4301 (08600-00922)			●(2)				●(3)			-
			TM4201 (08600-00934)			●(2)				●(3)			-
	15	Radio/Cassette + In dash CD-Changer + MD-Changer	TF4301 (08600-00922)		●				●				F/K (08695-00803) (3)
	16	Radio/Cassette + MD-Changer + Cass-storage	TF4301 (08600-00922)						●			●	F/K (08695-00803) (3)
			TM4201 (08600-00934)						●			●	F/K (08695-00803) (3)
	17	Radio/Cassette + MD-Changer + Full Map Navigation	TF4301 (08600-00922)						●(2)	●(3)			-
			TM4201 (08600-00934)						●(2)	●(3)			-
	18	Radio/Cassette + MD-Changer + CD-Changer + Full Map Navigation	TF4301 (08600-00922)			●(2)			●(2)	●(3)			-
	19	CD-Tuner + CD-storage	TM4412 (08600-00935)									●	-
			TM4414 (08600-00936)									●	-
	20	CD-Tuner + Cassette-Deck	TM4414 (08600-00936)	●									-

PRELIMINARY

08695-00803 = Hanging Seat Mounting Kit • Note (1) : Outside temperature sensor optional • Note (2) : Luggage area mounting • Note (3) : Passenger seat mounting

AUDIO APPLICATION CHART

TMME-CS Division Dev. Dept. - July 10th, 2001

Avensis Verso **M2*R

(RHD)

		COMBINATION	HEAD UNIT	+ ADD-ON UNIT(S): Seat Mounting CD-Changer TM0461 (08601-00912)	Hide Away CD-Changer TM0461 (08601-00911)	In-Dash CD-Changer TM0561 (08601-00907)	CD-Deck TF0411 (08601-00906)	Cassette-Deck TM0300 (08690-00827)	MD-Changer TM0660 (08601-00900)	Navigation System TNS500 (08545-00803)	Navigation System TNS200 (08545-00802)	Cassette-Storage PZ437-90342-00 or CD-Storage PZ437-90341-00	REQUIRED ADDITIONAL PARTS
1DIN Head-Unit	21	CD-Tuner + CD-Changer	TM4414 (08600-00936)			● (2)							A-box (55521-16030)
			TM4414 (08600-00936)				● (3)						A-box (55521-16030) + F/K (08695-00803)
	22	CD-Tuner + In dash CD-Changer	TM4414 (08600-00936)		●								-
	23	CD-Tuner + MD-Changer	TM4414 (08600-00936)						●				A-box (55521-16030) + F/K (08695-00803) (3)
	24	CD-Tuner + Full Map Navigation	TM4414 (08600-00936)							● (3)			-
	25	CD-Tuner + CD-Changer + CD-storage	TM4414 (08600-00936)			● (2)						●	-
			TM4414 (08600-00936)				● (3)					●	F/K (08695-00803)
	26	CD-Tuner + CD-Changer + Full Map Navigation	TM4414 (08600-00936)			● (2)				● (3)			-
	27	CD-Tuner + MD-Changer + CD-storage	TM4414 (08600-00936)						●			●	F/K (08695-00803) (3)
	28	CD-Tuner + MD-Changer + Full Map Navigation	TM4414 (08600-00936)						● (2)	● (3)			-

PRELIMINARY

08695-00803 = Hanging Seat Mounting Kit • Note (1) : Outside temperature sensor optional • Note (2) : Luggage area mounting • Note (3) : Passenger seat mounting

AUDIO APPLICATION CHART

TMME-CS Division Dev. Dept. - July 10th, 2001

Avensis Verso **M2*R (RHD)

+ ADD-ON UNIT(S)

			Seat Mounting CD-Changer TM0461 (08601-00912)	Hide Away CD-Changer TM0461 (08601-00911)	In-Dash CD-Changer TM0561 (08601-00907)	CD-Deck TF0411 (08601-00906)	Cassette-Deck TM0300 (08690-00827)	MD-Changer TM0660 (08601-00900)	Navigation System TNS500 (08545-00803)	Navigation System TNS200 (08545-00802)	Cassette-Storage PZ437-90342-00 or CD-Storage PZ437-90341-00	
		COMBINATION	**HEAD UNIT**									**REQUIRED ADDITIONAL PARTS**
Wide-2DIN	29	Radio/Cassette (only)	MOP-Unit									-
			08600-00948 (green)-note (1)									-
	30	CD-Tuner (only)	MOP-Unit									-
			08600-00958-A (green)-note (1)									-
	31	Radio/Cassette + CD-Changer	MOP-Unit			● (2)						-
			MOP-Unit				● (3)					F/K (08695-00803)
			08600-00948 (green)-note (1)			● (2)						-
			08600-00948 (green)-note (1)				● (3)					F/K (08695-00803)
	32	Radio/Cassette + MD Changer	MOP-Unit					●				F/K (08695-00803) (3)
			08600-00948 (green)-note (1)					●				F/K (08695-00803) (3)
	33	Radio/Cassette + Navigation (TBT)	MOP-Unit							● (3)		-
			08600-00948 (green)-note (1)							● (3)		-
	34	Radio/Cassette + CD-Changer + MD-Changer	MOP-Unit				● (3)	● (2)				F/K (08695-00803)
			08600-00948 (green)-note (1)				● (3)	● (2)				F/K (08695-00803)

PRELIMINARY

08695-00803 = Hanging Seat Mounting Kit • Note (1) : Outside temperature sensor optional • Note (2) : Luggage area mounting • Note (3) : Passenger seat mounting

⚠ Only possible if the vehicle is pre-equipped with the 18P and 12P audio-connectors

AUDIO APPLICATION CHART

TMME-CS Division Dev. Dept. - July 10th, 2001

Avensis Verso **M2*R (RHD)

		COMBINATION	HEAD UNIT	+ ADD-ON UNIT(S): Seat Mounting CD-Changer TM0461 (08601-00912)	Hide Away CD-Changer TM0461 (08601-00911)	In-Dash CD-Changer TM0561 (08601-00907)	CD-Deck TF0411 (08601-00906)	Cassette-Deck TM0300 (08600-00827)	MD-Changer TM0660 (08601-00900)	Navigation System TNS500 (08545-00803)	Navigation System TNS200 (08545-00802)	Cassette-Storage PZ437-90342-00 or CD-Storage PZ437-90341-00	REQUIRED ADDITIONAL PARTS
Wide-2DIN ⚠	35	Radio/Cassette + CD-Changer + Navigation (TBT)	MOP-Unit			●(2)					●(3)		-
			08600-00948 (green)-note (1)			●(2)					●(3)		-
	36	Radio/Cassette + MD Changer + Navigation (TBT)	MOP-Unit						●(2)		●(3)		-
			08600-00948 (green)-note (1)						●(2)		●(3)		-
	37	Radio/Cassette + MD Changer + CD-Changer + Navigation (TBT)	MOP-Unit			●(2)			●(2)		●(3)		-
			08600-00948 (green)-note (1)			●(2)			●(2)		●(3)		-
	38	CD-Tuner + CD-Changer	MOP-Unit			●(2)							-
			MOP-Unit				●(3)						F/K (08695-00803)
			08600-00958-A (green)-note (1)			●(2)							-
			08600-00958-A (green)-note (1)				●(3)						F/K (08695-00803)
	39	CD-Tuner + MD-Changer	MOP-Unit						●				F/K (08695-00803) (3)
			08600-00958-A (green)-note (1)						●				F/K (08695-00803) (3)
	40	CD-Tuner + Navigation (TBT)	MOP-Unit								●(3)		-
			08600-00958-A (green)-note (1)								●(3)		-

PRELIMINARY

08695-00803 = Hanging Seat Mounting Kit • Note (1) : Outside temperature sensor optional • Note (2) : Luggage area mounting • Note (3) : Passenger seat mounting

⚠ Only possible if the vehicle is pre-equipped with the 18P and 12P audio-connectors

AUDIO APPLICATION CHART

TMME-CS Division Dev. Dept. - July 10th, 2001

Avensis Verso **M2*R

(RHD)

		COMBINATION	HEAD UNIT	+ ADD-ON UNIT(S): Seat Mounting CD-Changer TM0461 (08601-00912)	Hide Away CD-Changer TM0461 (08601-00911)	In-Dash CD-Changer TM0561 (08601-00907)	CD-Deck TF0411 (08601-00906)	Cassette-Deck TM0300 (08690-00827)	MD-Changer TM0660 (08601-00900)	Navigation System TNS500 (08545-00803)	Navigation System TNS200 (08545-00802)	Cassette-Storage PZ437-90342-00 or CD-Storage PZ437-90341-00	REQUIRED ADDITIONAL PARTS
Wide-2DIN	41	CD-Tuner + CD-Changer + MD-Changer	MOP-Unit					●(3)	●(2)				F/K (08695-00803)
			08600-00958-A (green)-note (1)					●(3)	●(2)				F/K (08695-00803)
	42	CD-Tuner + CD-Changer + Navigation (TBT)	MOP-Unit			●(2)					●(3)		-
			08600-00958-A (green)-note (1)			●(2)					●(3)		-
	43	CD-Tuner + MD-Changer + Navigation (TBT)	MOP-Unit						●(2)		●(3)		F/K (08695-00803)
			08600-00958-A (green)-note (1)						●(2)		●(3)		F/K (08695-00803)
	44	CD-Tuner + MD-Changer + CD-Changer + Navigation (TBT)	MOP-Unit			●(2)			●(2)		●(3)		-
			08600-00958-A (green)-note (1)			●(2)			●(2)		●(3)		-

PRELIMINARY

08695-00803 = Hanging Seat Mounting Kit • Note (1) : Outside temperature sensor optional • Note (2) : Luggage area mounting • Note (3) : Passenger seat mounting

⚠ Only possible if the vehicle is pre-equipped with the 18P and 12P audio-connectors

2. SYSTEM LAYOUT

2.1 CD-CHANGER

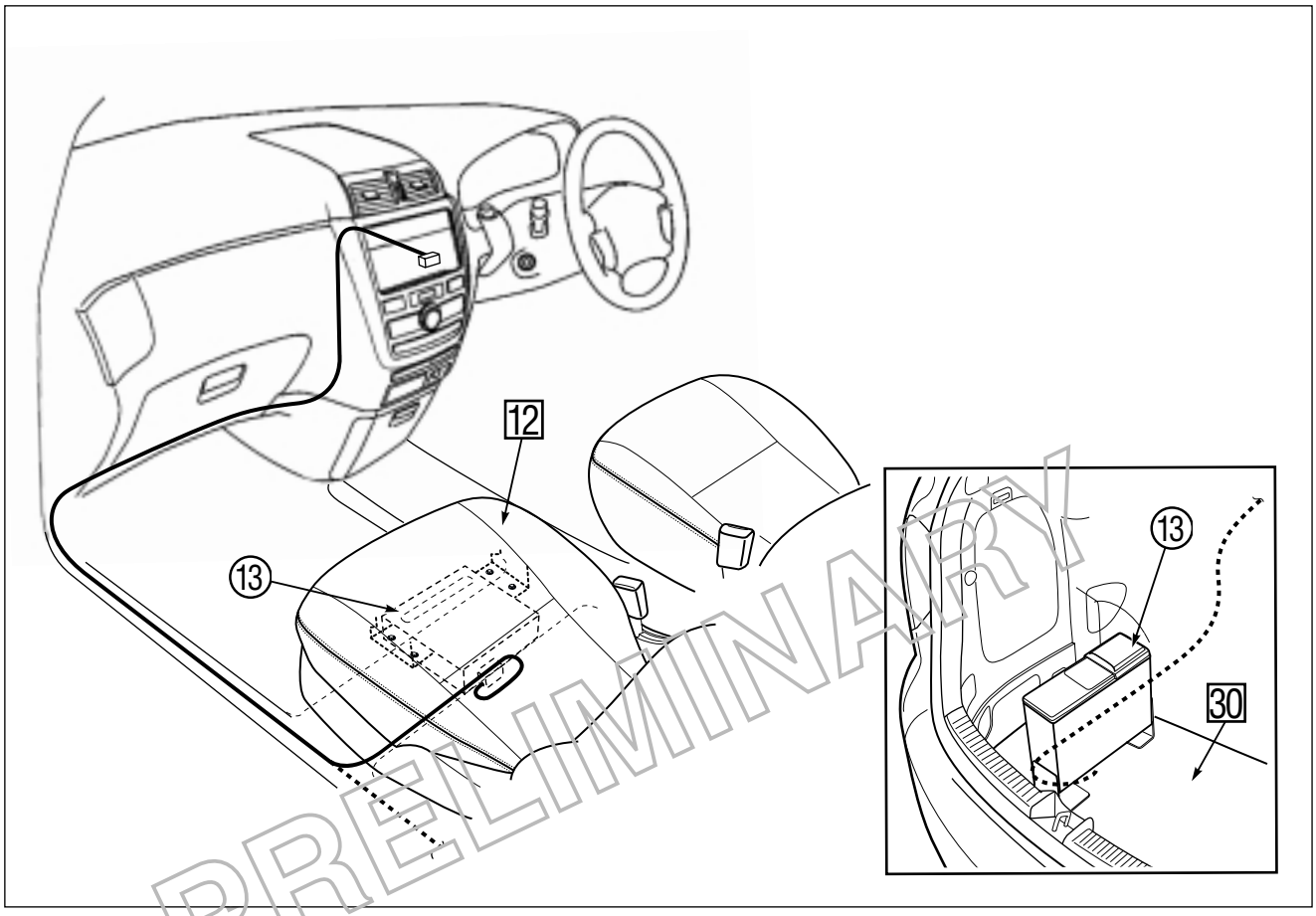

NOTE:
The preferred position of the CD-changer ⑬ is under the passenger's seat 12.
In case of vehicles with navigation, the navi ECU is located under the passenger's seat 12. In this case the CD-changer ⑬ can only be installed in the luggage area 30.

To install the CD-Changer ⑬ under the passenger's seat 12, you need the seat mounting CD-changer TM0461 (08601-00912) and the additional hanging seat mounting kit F/K (08695-00803). To install the CD-changer ⑬ in the luggage area 30, you need the hide away CD-changer TM0461 (08601-00911).

2.2 MD-CHANGER

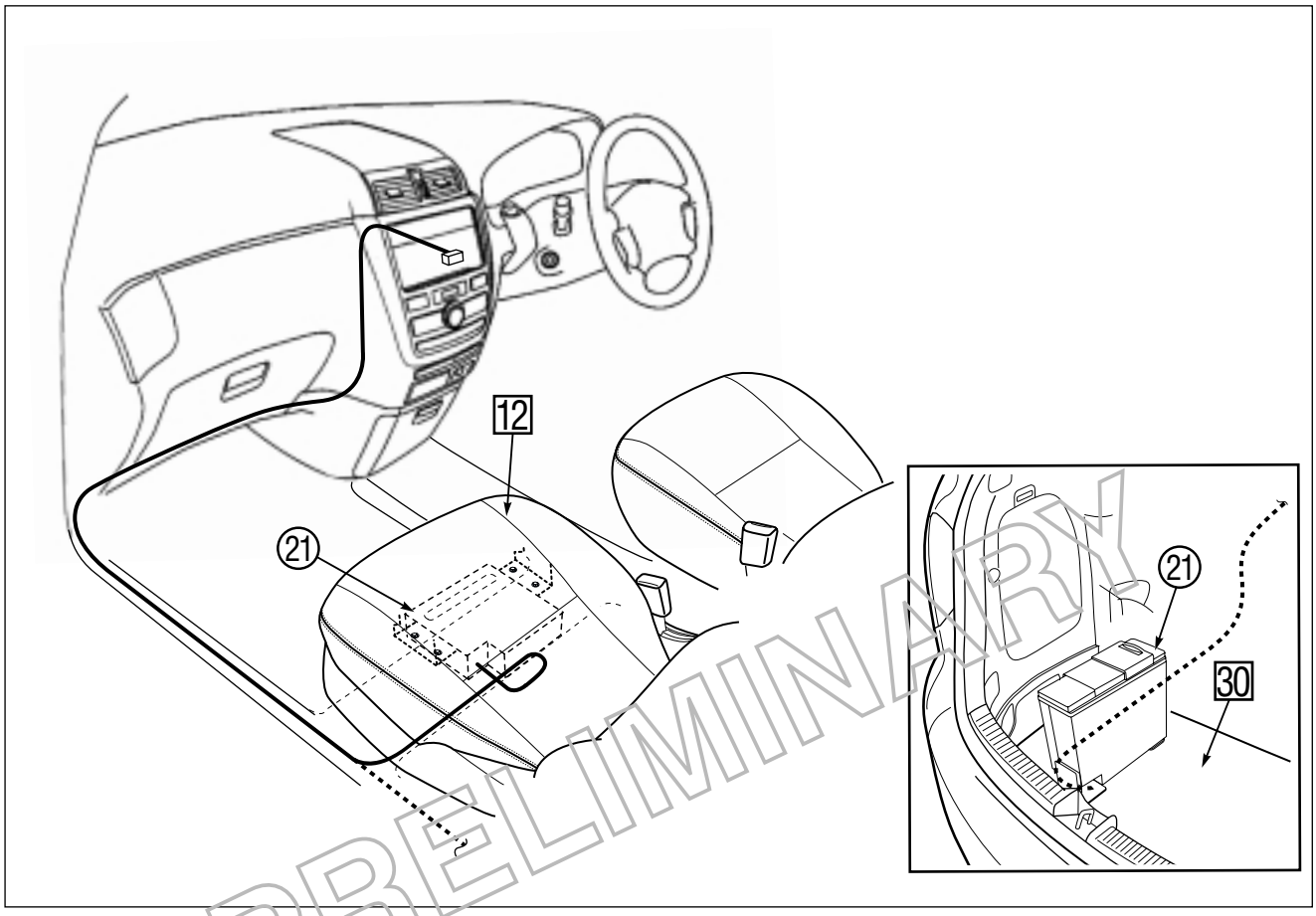

PRELIMINARY

NOTE:
The preferred position of the MD-changer is under the passenger's seat. In case both the seat mounting CD-changer and the MD-changer are to be installed, the MD-changer should be installed in the luggage area. In case navigation is installed the CD-changer and MD-changer can be installed in the luggage area.

To install the MD-changer ㉑ under the passenger's seat 12, you need the MD-changer TM0660 (08601-00900) and the additional hanging seat mounting kit F/K (08695-00803).
To install the MD-changer ㉑ in the luggage area 30, you only need the MD-changer TM0660 (08601-00900).

3. COMBO / ADD ON UNIT INSTALLATION

3.1 VEHICLE DISASSEMBLY

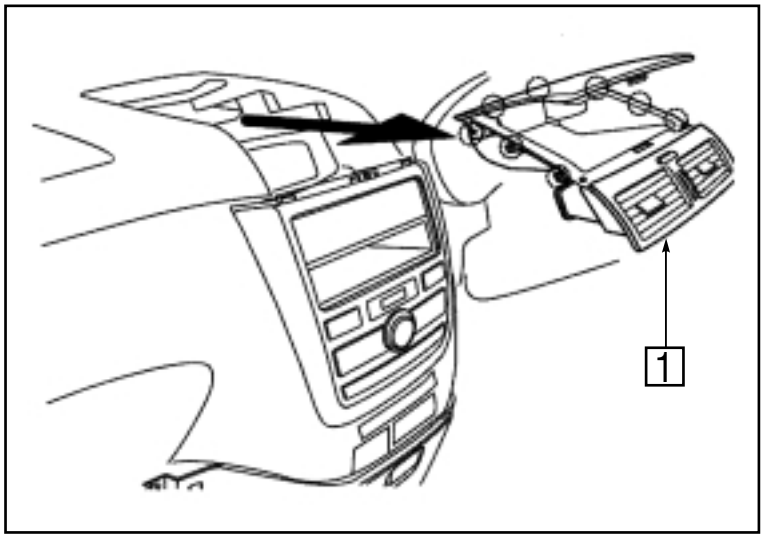

Fig. 1

1. Remove the upper cluster 1.
   ◌: Clip (8x)

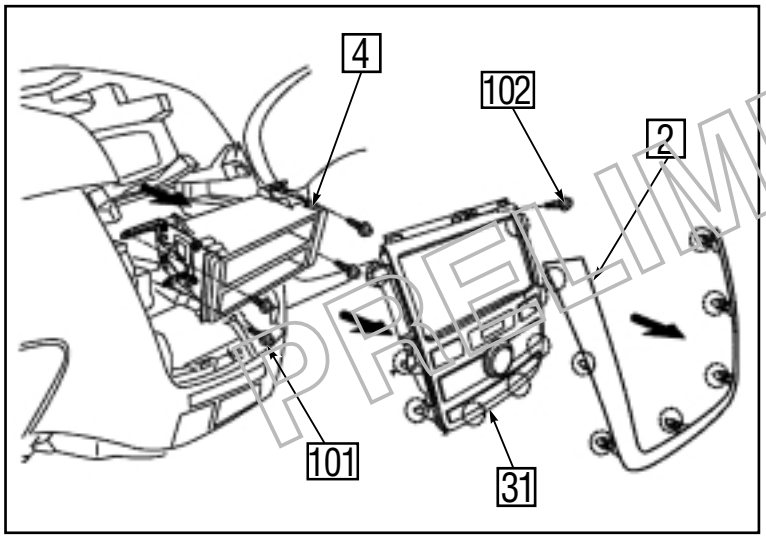

Fig. 2

2. Remove the panel 2 and centre cluster 31.
   Remove the accessory box 4.
   101: Screw (4x)
   102: Screw (1x)
   ◌: Clip (7x) + (8x)

PRELIMINARY

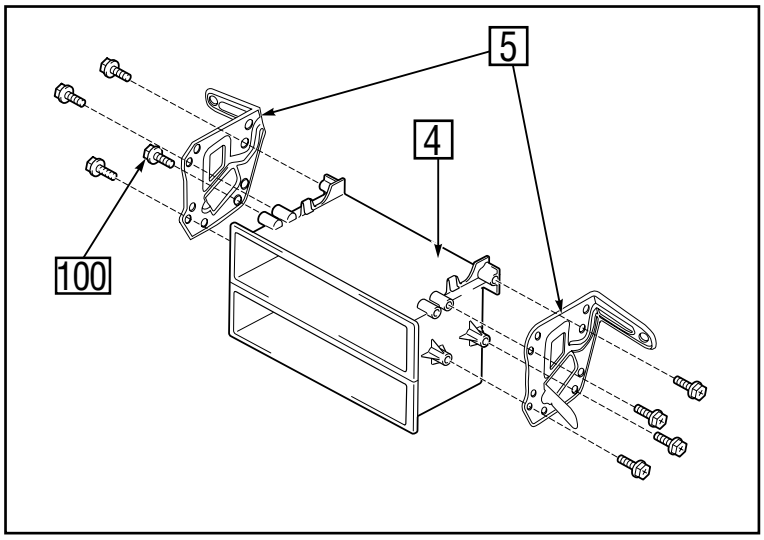

Fig. 3

3. Remove the brackets 5 (2x) from the accessory box 4.
   100: Screw (8x)

3.2 1DIN AUDIO INSTALLATION

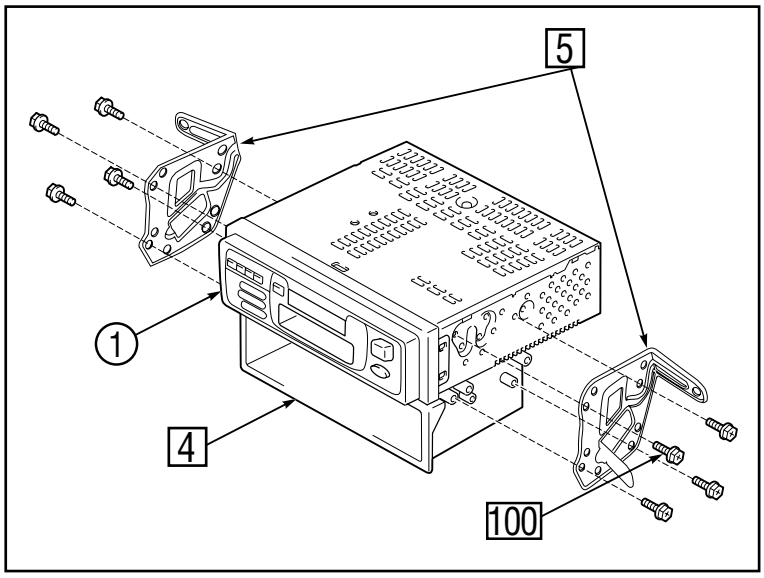

Fig. 4

1. Mount the brackets 5 (2x) to the audio assembly ① and accessory box 4 or add on unit.
   100: Screw (8x)

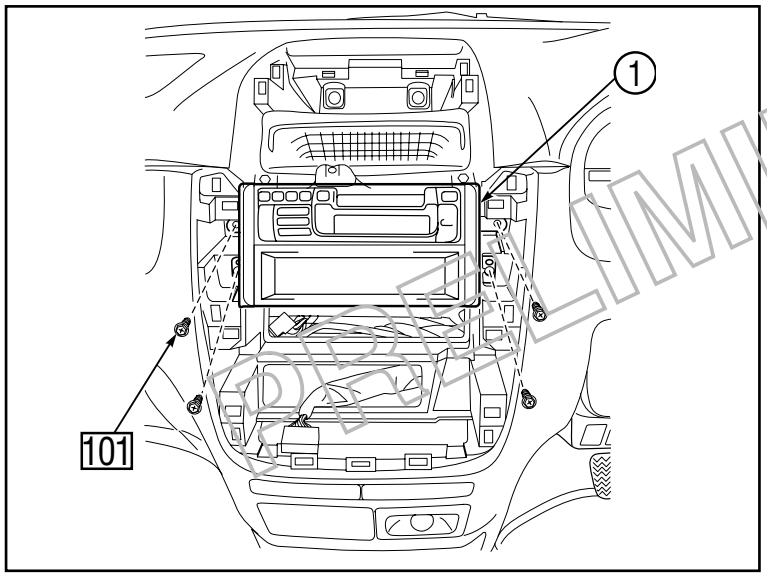

Fig. 5

2. Before fitting the audio assembly ① to the vehicle connect the vehicle's audio connector (10P/6P) and antenna.
   101: Screw (4x)

PRELIMINARY

REFIT THE REMOVED PARTS.

3.3 1.4DIN AUDIO INSTALLATION

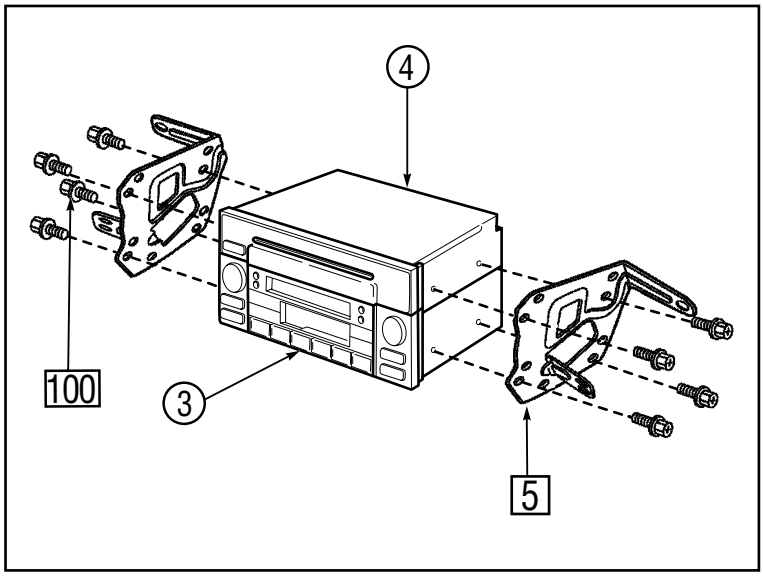

Fig. 6

WITH 0.6DIN ADD ON UNIT

1. Mount the brackets 5 (2x) onto the 1.4 DIN audio assembly ③ and 0.6DIN add on unit ④.
   100: Screw (8x)

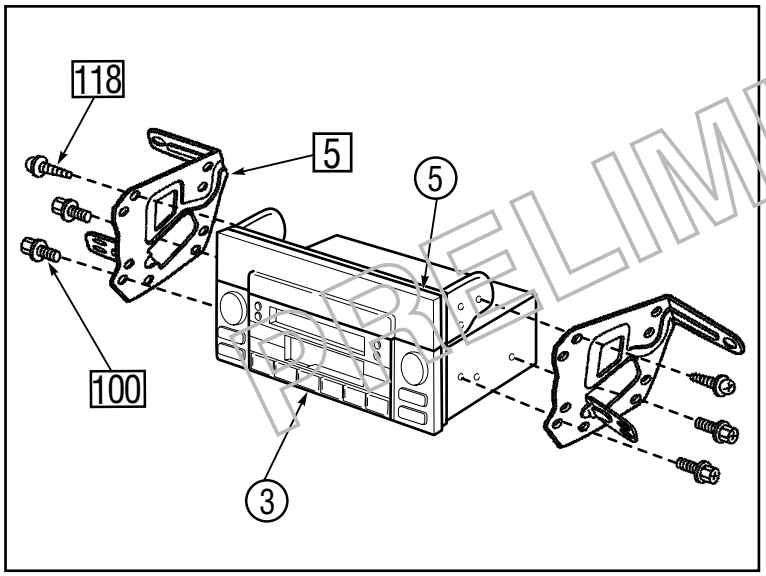

Fig. 7

WITHOUT 0.6DIN ADD ON UNIT

1. Fit the 0.6-DIN cover plate ⑤.
   Mount the brackets 5 (2x) onto the audio assembly ③ and 0.6DIN cover plate ⑤.
   100: Screw (4x)
   118: Screw (2x)

PRELIMINARY

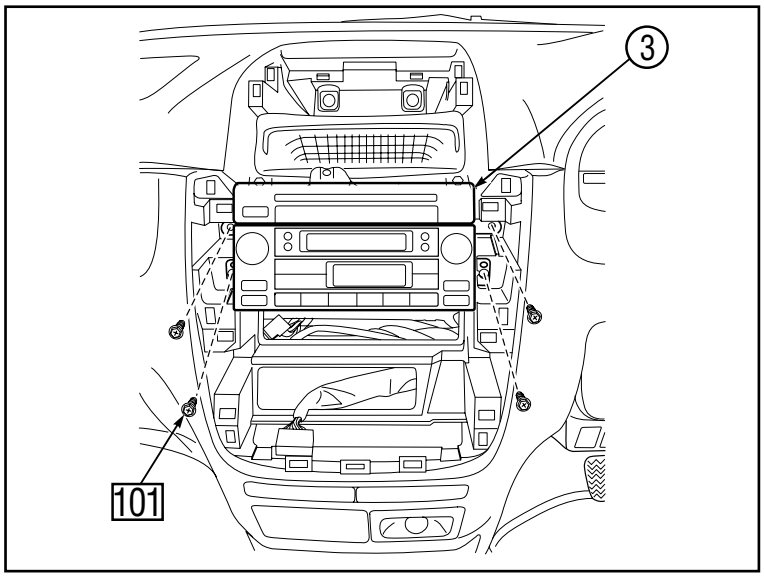

Fig. 8

2. Before fitting the audio assembly ③ to the vehicle connect the vehicle's audio connector (10P/6P) and antenna.
   101: Screw (4x)

REFIT THE REMOVED PARTS.

3.4 WIDE-2DIN AUDIO INSTALLATION

⚠ Only possible if the vehicle is pre-equipped with the 18P and 12P audio-connectors.

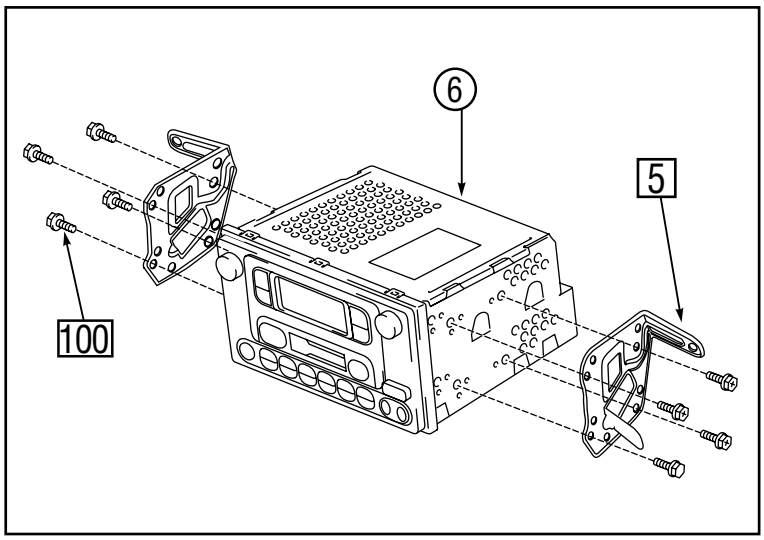

Fig. 9

1. Mount the brackets 5 (2x) onto the wide-2DIN audio assembly ⑥.
   100: Screw (8x)

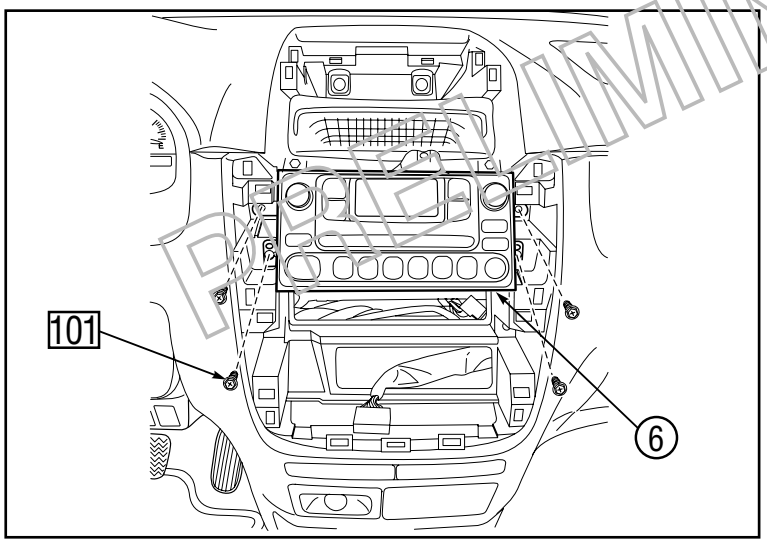

Fig. 10

2. Before fitting the wide-2DIN audio assembly ⑥ to the vehicle connect the vehicle's audio connector (10P/6P) and antenna.

   101: Screw (4x)

REFIT THE REMOVED PARTS.

PRELIMINARY

4. CD-, MD-CHANGER AND SUBWOOFER INSTALLATION

4.1 VEHICLE DISASSEMBLY

4.1.1 IN CASE OF INSTALLATION UNDER THE PASSENGER'S SEAT

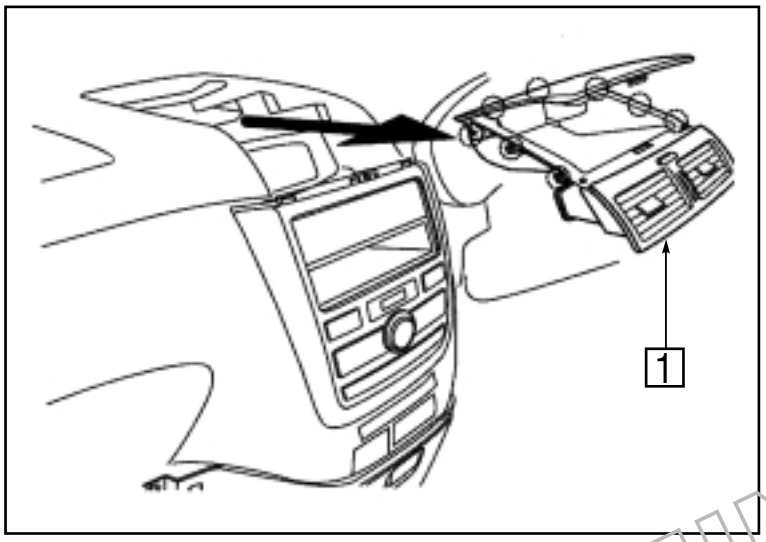

Fig. 11

1. Remove the upper cluster 1.
   ◌: Clip (8x)

PRELIMINARY

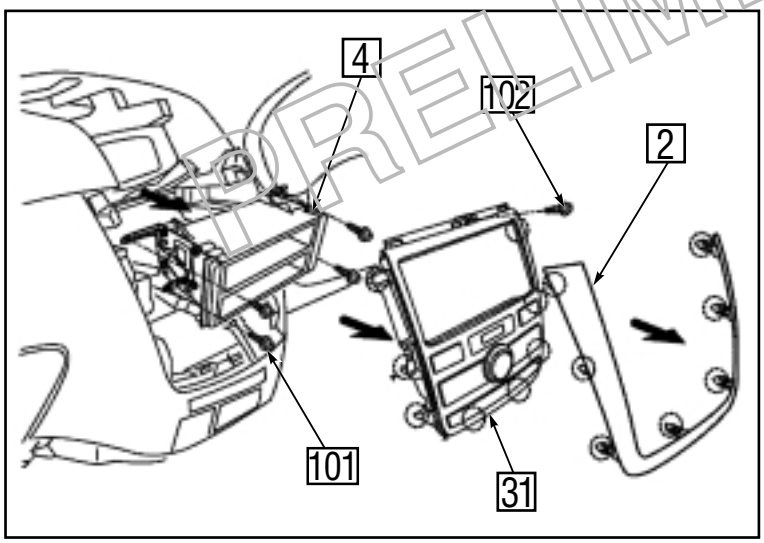

Fig. 12

2. Remove the panel 2 and centre cluster 31.
   Remove the accessory box 4.
   101: Screw (4x)
   102: Screw (1x)
   ◌: Clip (7x) + (8x)

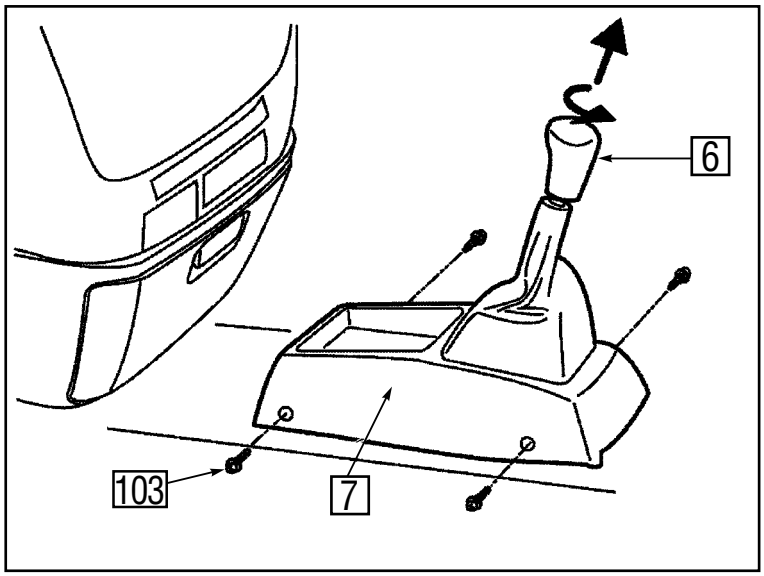

Fig. 13

3. Remove the shift knob 6 and shift cover 7.
   103: Screw (4x)

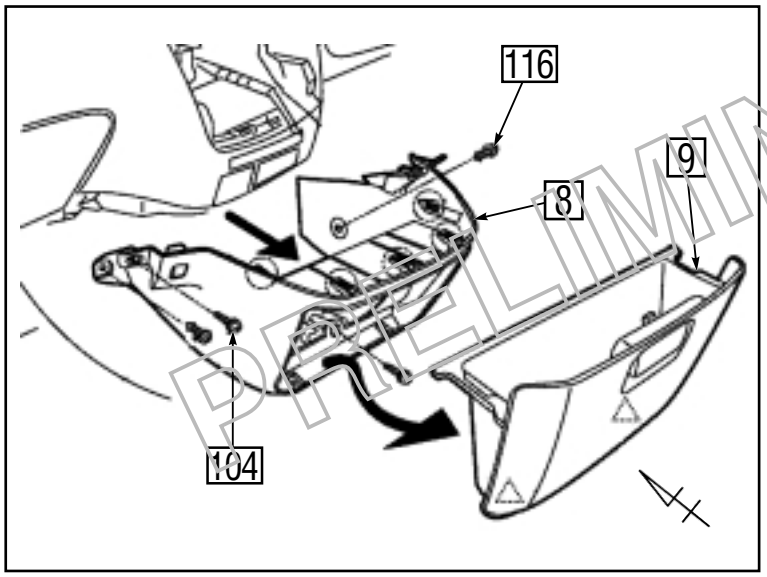

Fig. 14

4. Remove the under box 8 and lower cover 9.
   ◌: Clip (5x)
   △: Hook (2x)
   104: Screw (5x)
   116: Clip (1x)

PRELIMINARY

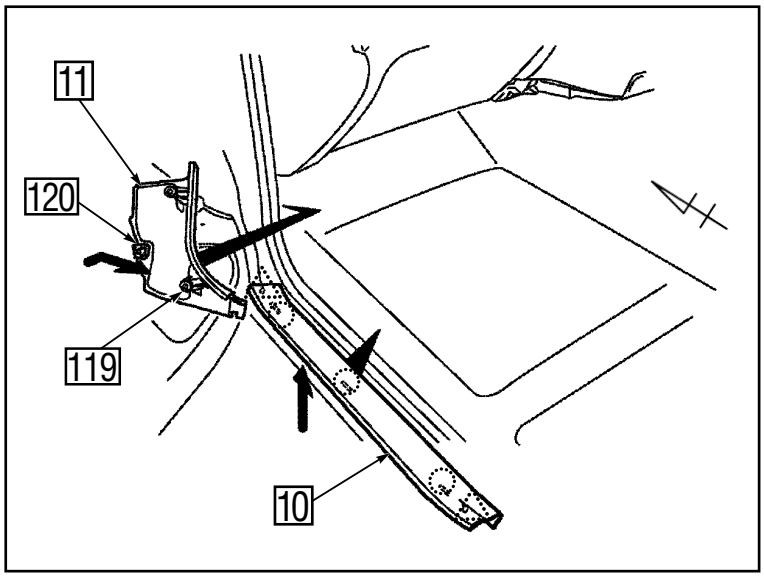

Fig. 15

5. Remove the front scuff plate (L) 10 and kick panel (L) 11.
   ◌: Clip (3x)
   △: Hook (2x)
   119: Clip (2x)
   120: Hook (1x)

4.1.2 IN CASE OF INSTALLATION IN THE LUGGAGE AREA

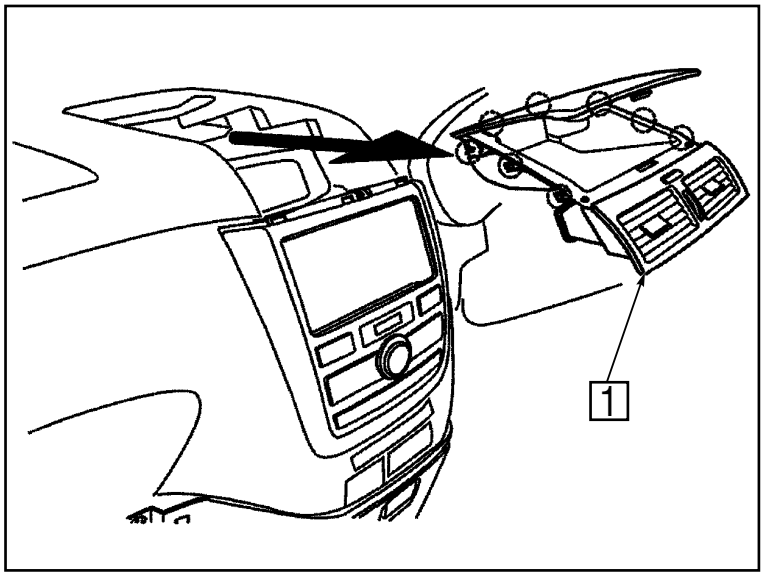

Fig. 16

1. Remove the upper cluster 1.
   ◌: Clip (8x)

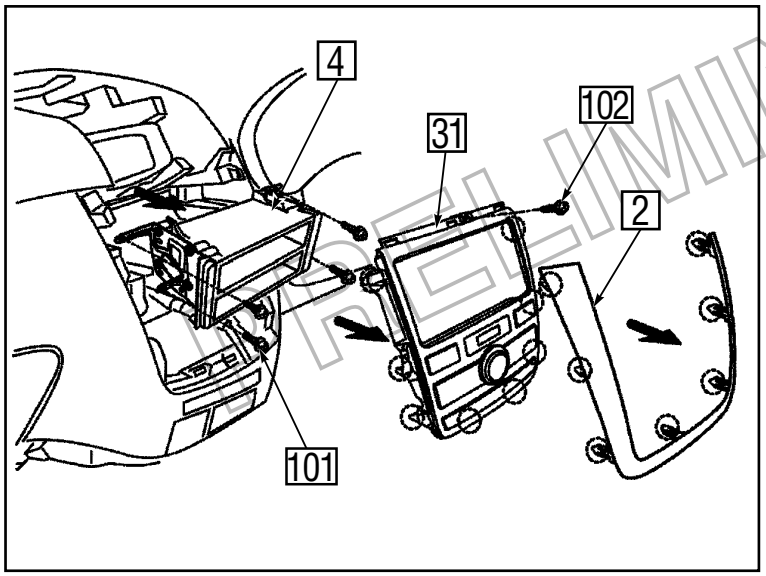

Fig. 17

2. Remove the panel 2 and centre cluster 31.
   Remove the accessory box 4.
   101: Screw (4x)
   102: Screw (1x)
   ◌: Clip (7x) + (8x)

PRELIMINARY

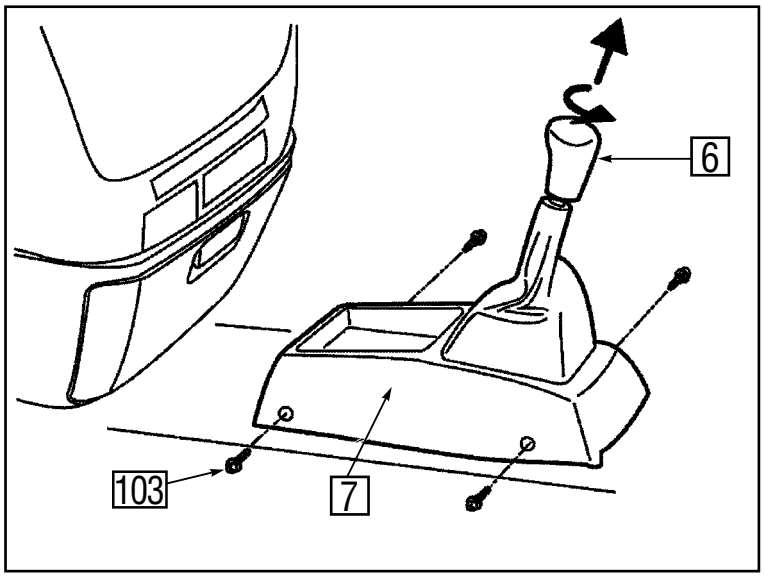

Fig. 18

3. Remove the shift knob 6 and shift cover 7.
   103: Screw (4x)

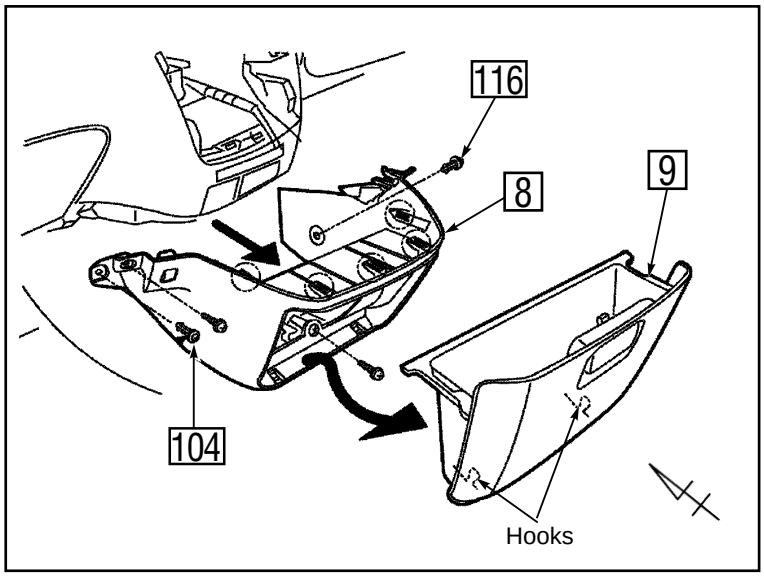

Fig. 19

4. Remove the under box 8 and lower cover 9.
   104: Screw (5x)
   116: Clip (1x)
   ◌: Clip (5x)

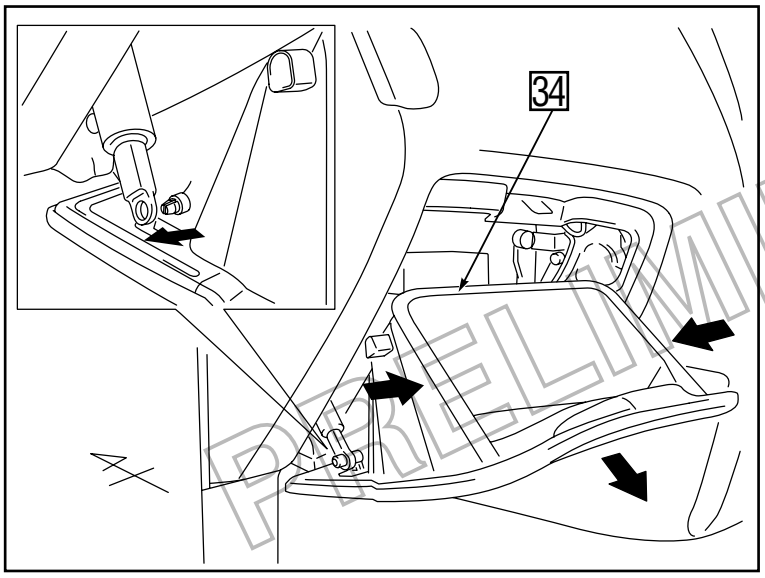

Fig. 20

5. Remove the glove compartment 34.

PRELIMINARY

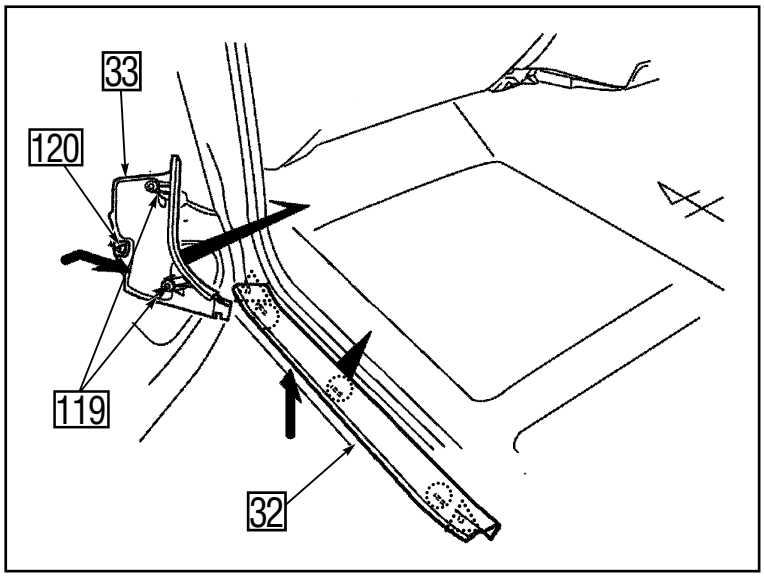

Fig. 21

6. Remove the front scuff plate (L) 32 and kick panel (L) 33.
   ◌: Clip (3x)
   △: Hook (2x)
   119: Clip (2x)
   120: Hook (1x)

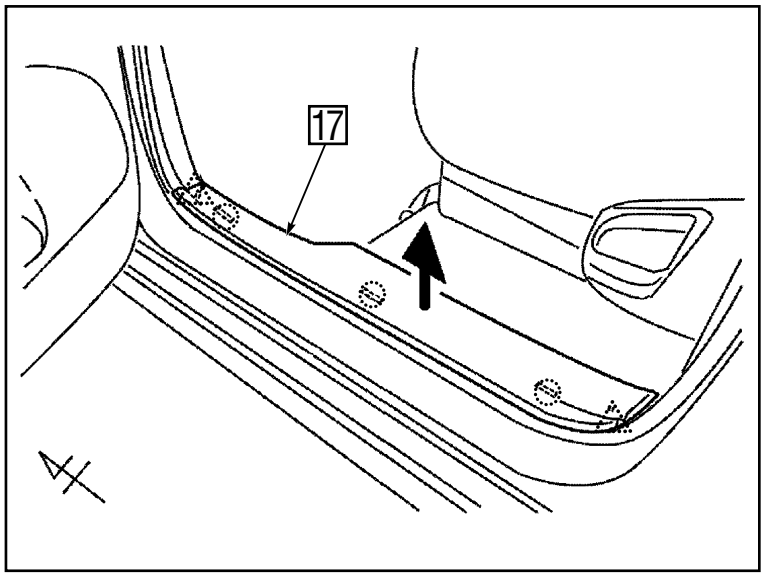

Fig. 22

7. Remove the rear scuff plate (L) 17.
   ◌: Clip (3x)
   △: Hook (2x)

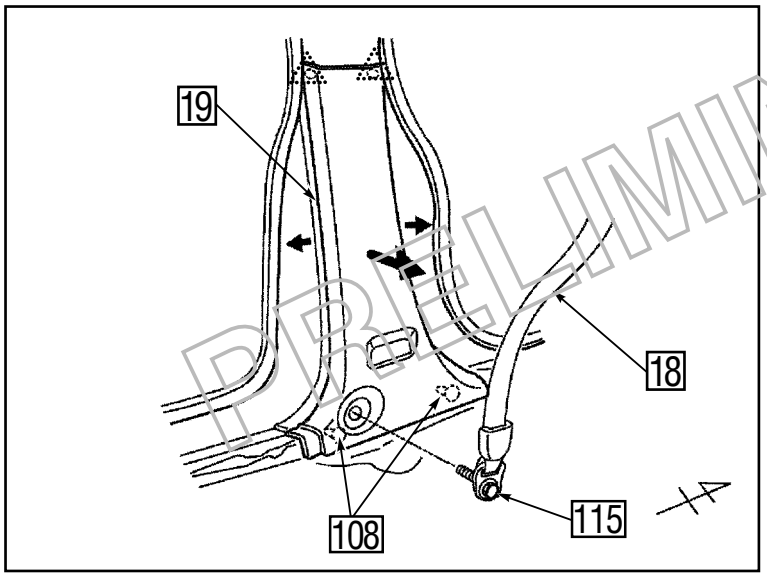

Fig. 23

8. Remove the seat belt 18 and centre pillar cover (L) 19.
   △: Hook (2x)
   108: Clip (2x)
   115: Bolt w/ washer (1x)

CAUTION:
Fasten the bolt with specified torque when reassembling.

PRELIMINARY

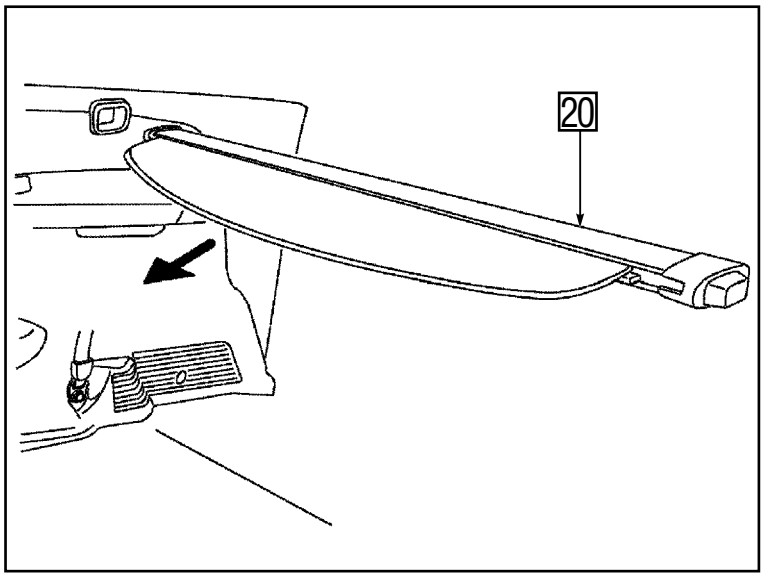

Fig. 24

9. Remove the cover 20.

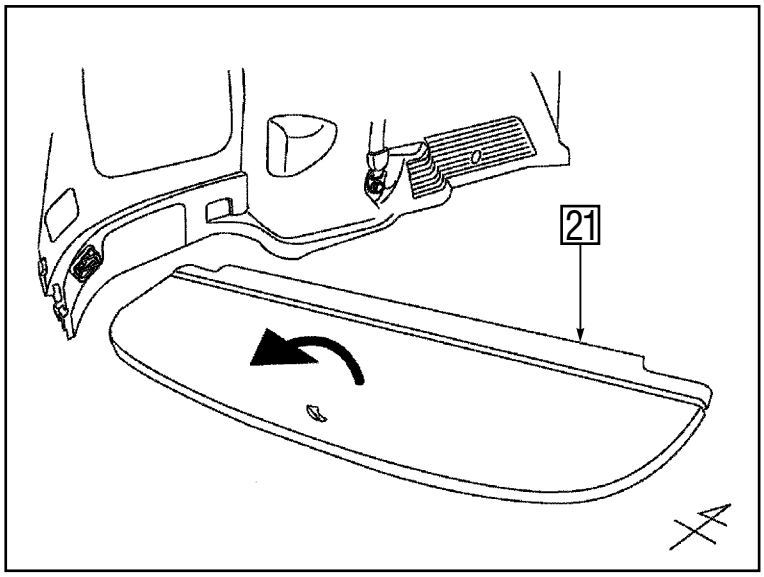

Fig. 25

10. Remove the luggage floor board 21.

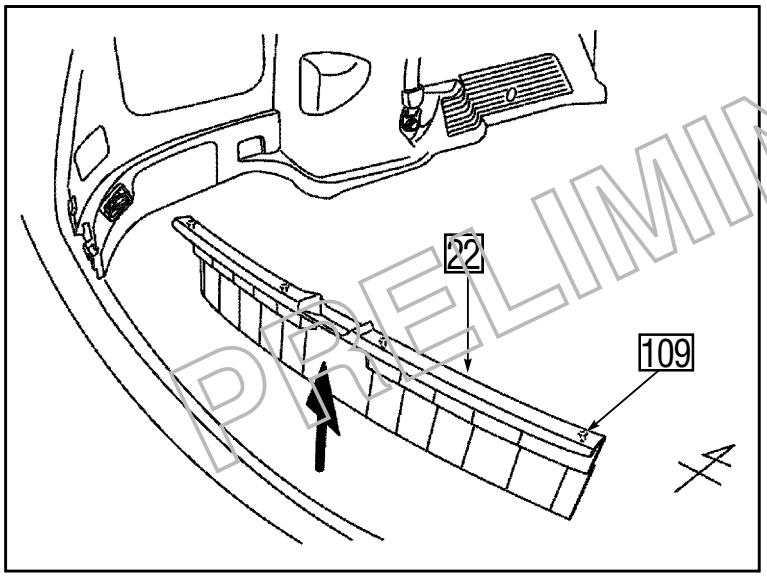

Fig. 26

11. Remove the luggage finish plate 22.
    109: Clip (4x)

PRELIMINARY

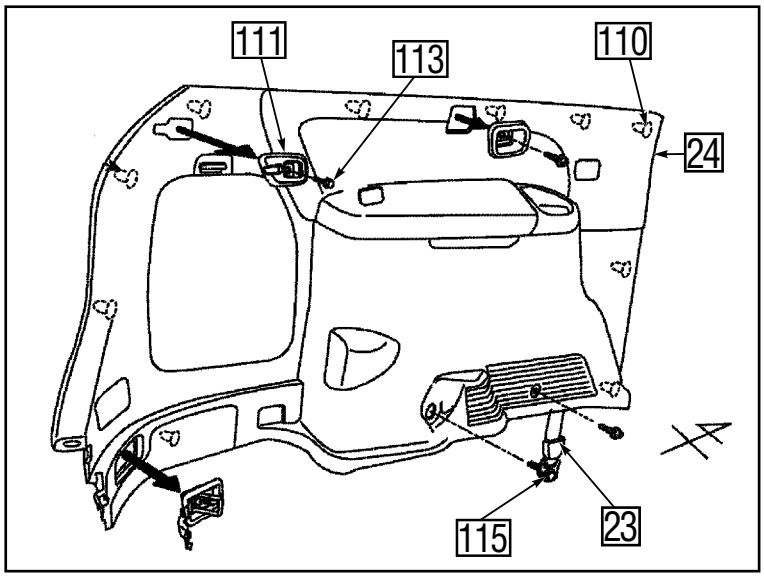

Fig. 27

12. Remove the seat belt 23 and luggage side trim (L) 24.
    110: Clip (10x)
    111: Cover (2x)
    113: Screw (2x)
    115: Bolt w/ washer (1x)

CAUTION:

Fasten the bolt with specified torque when reassembling.

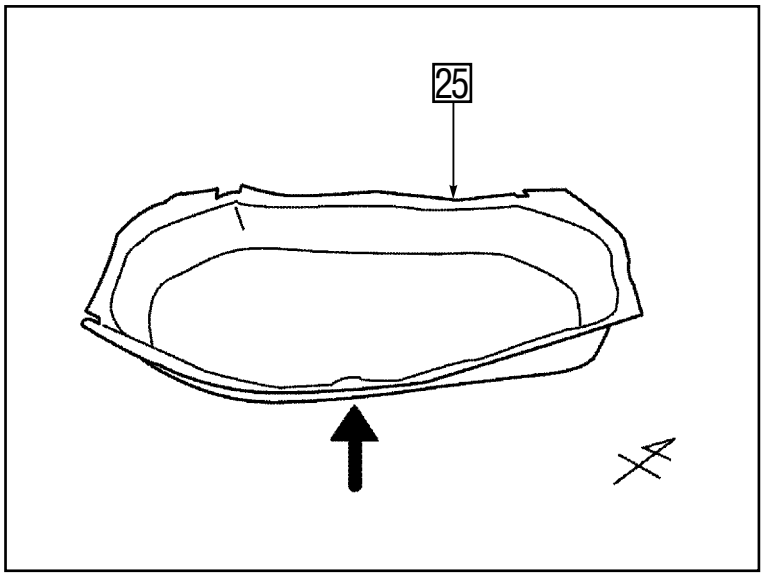

Fig. 28

13. Remove the luggage floor trim 25.

PRELIMINARY

4.2 CD- AND MD-CHANGER INSTALLATION

4.2.1 HANGING UNDER THE PASSENGER'S SEAT

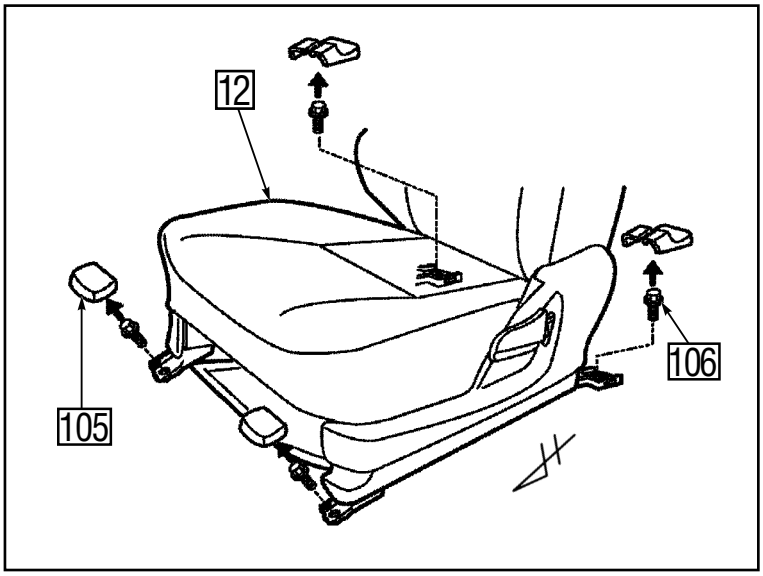

Fig. 29

1. Remove the passenger's seat 12.
   105: Cover (4x)
   106: Bolt w/ washer (4x)

CAUTION:
Fasten the bolt with specified torque when reassembling.

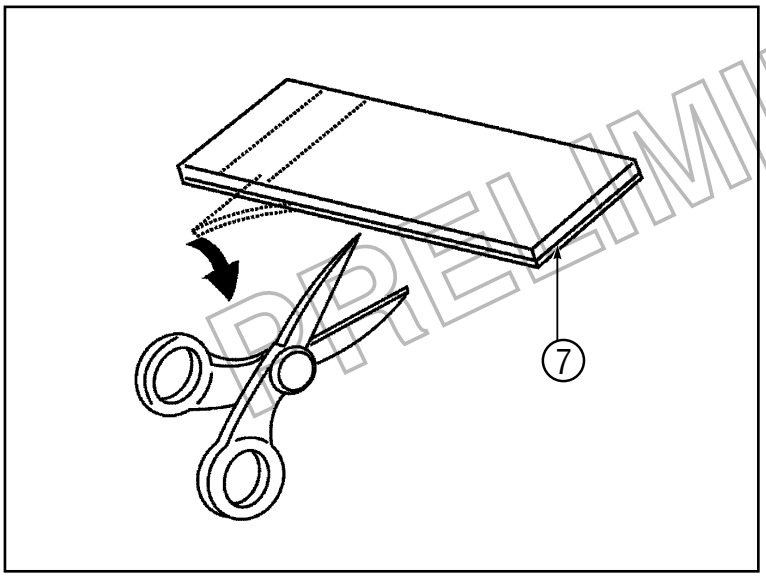

Fig. 30

2. Cut the tape ⑦ (10 pieces).

PRELIMINARY

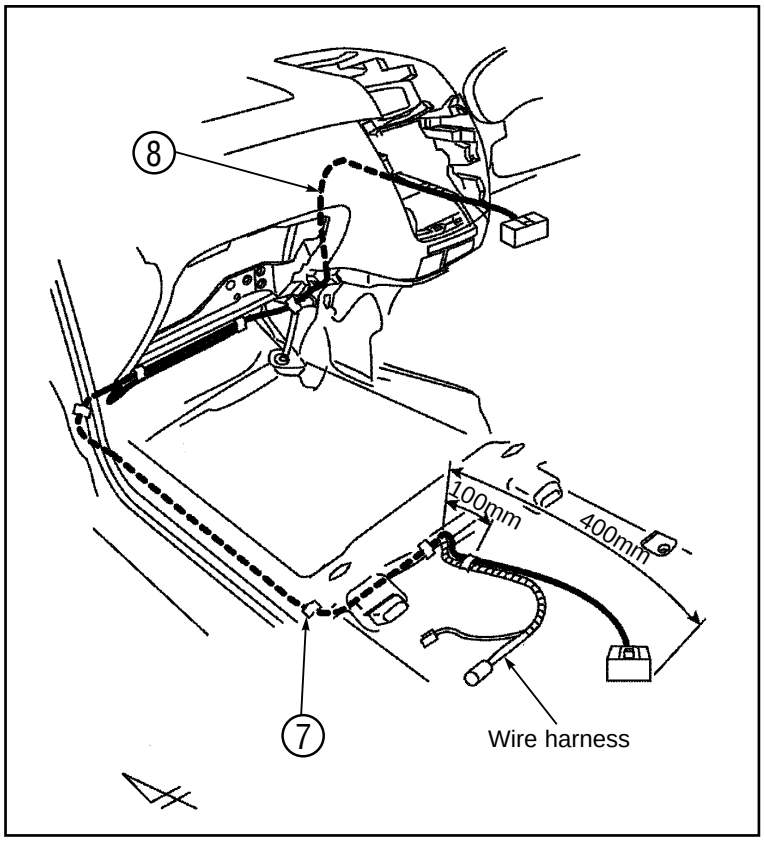

Fig. 31

3. Route and attach the changer wire ⑧ using tape ⑦ (7x).

PRELIMINARY

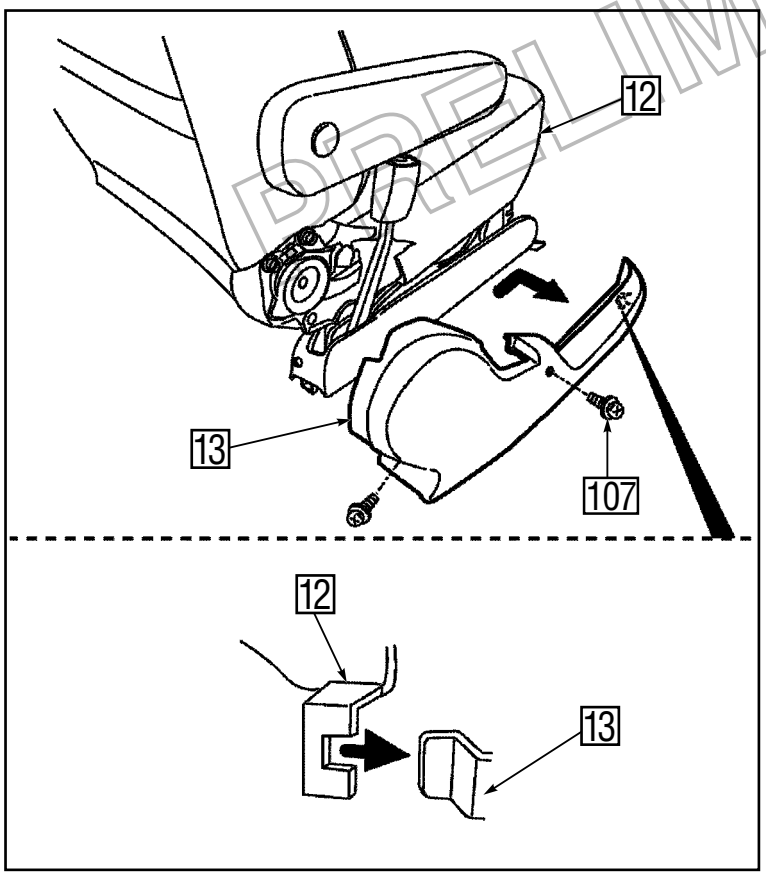

Fig. 32

4. Remove the side cover (R) 13 of the passenger's seat 12.
   107: Screw (2x)

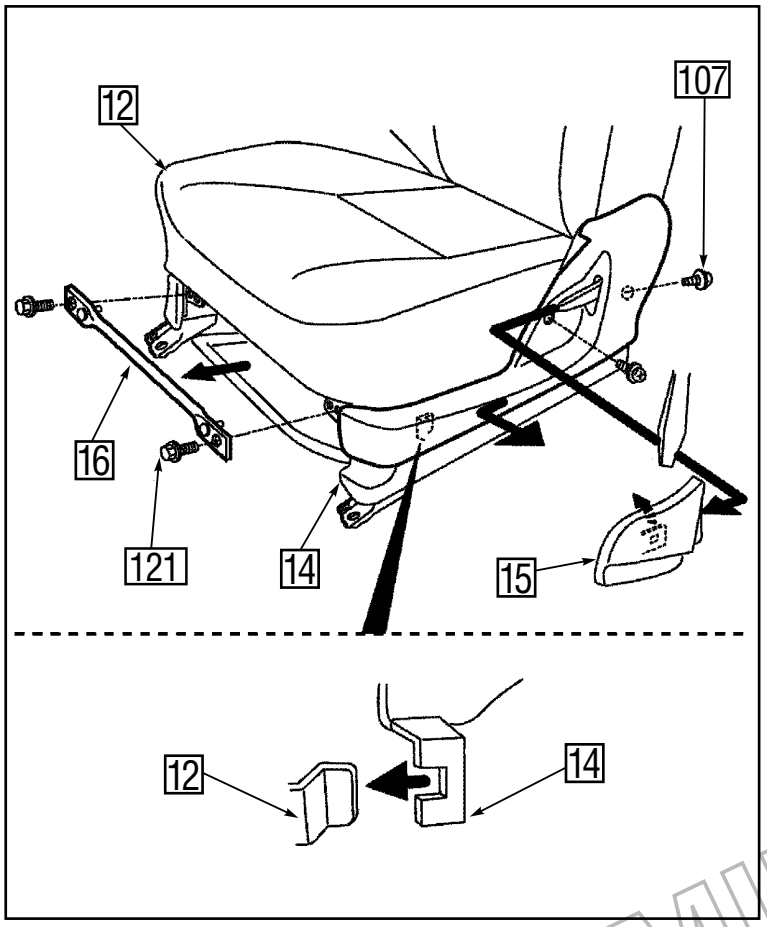

Fig. 33

5. Remove the knob 15 and side cover (L) 14 of the passenger's seat 12.
   Remove the reinforcement bar 16.
   107: Screw (2x)
   121: Bolt w/ washer (2x)

PRELIMINARY

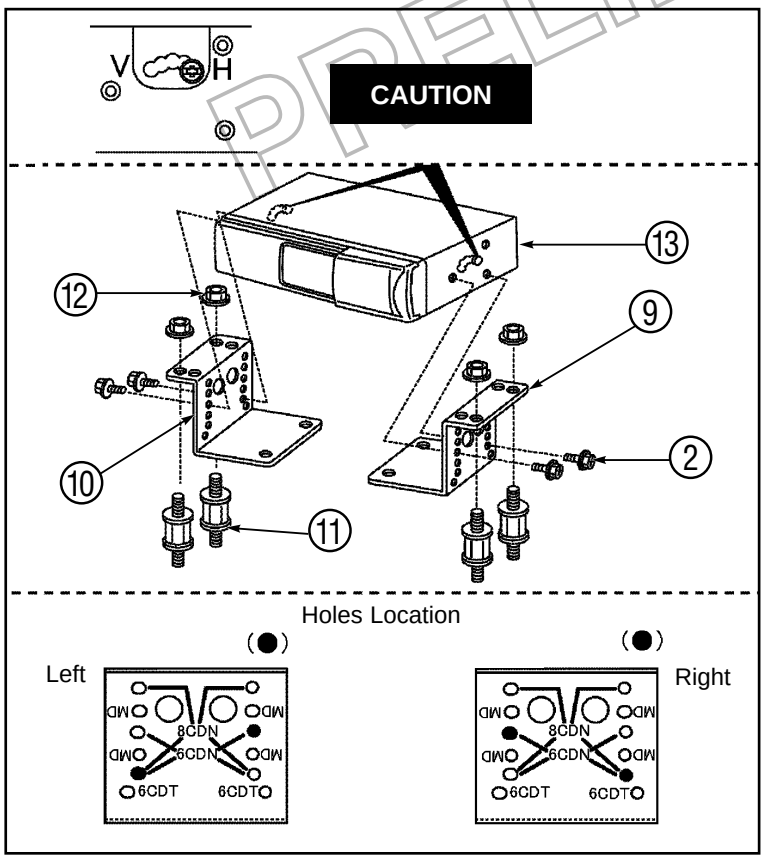

Fig. 34

FOR CD-CHANGER INSTALLATION

6. Fit the side brackets ⑨ (2x) and dampers ⑪ (4x) onto the CD-changer ⑬ using bolts ② and nuts ⑫.
   ②: Bolt (M5x9) (4x)
   ⑫: Nut (M6) (4x)
   ⑪: Damper ('6CDN' Mark) (4x)

CAUTION:

Loosen the screws before moving them. Screw up after the position is changed.

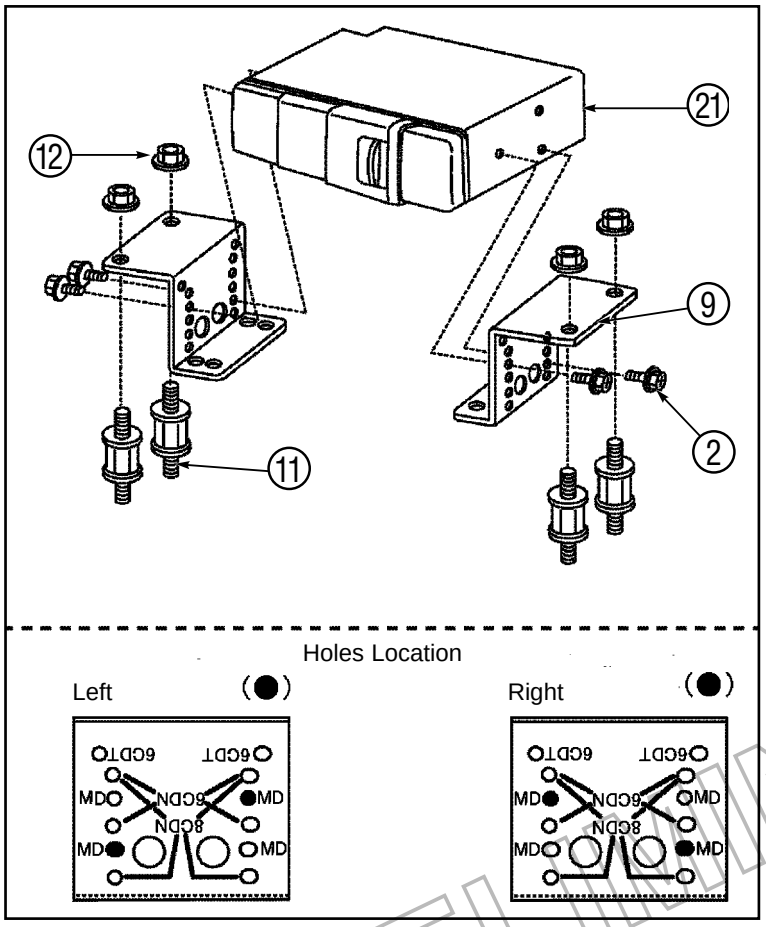

Fig. 35

FOR MD-CHANGER INSTALLATION

6. Fit the side brackets ⑨ (2x) and dampers ⑪ (4x) onto the MD-changer ㉑ using bolts ② and nuts ⑫.
   ②: Bolt (M5x9) (4x)
   ⑫: Nut (M6) (4x)
   ⑪: Damper ('MD' Mark) (4x)

PRELIMINARY

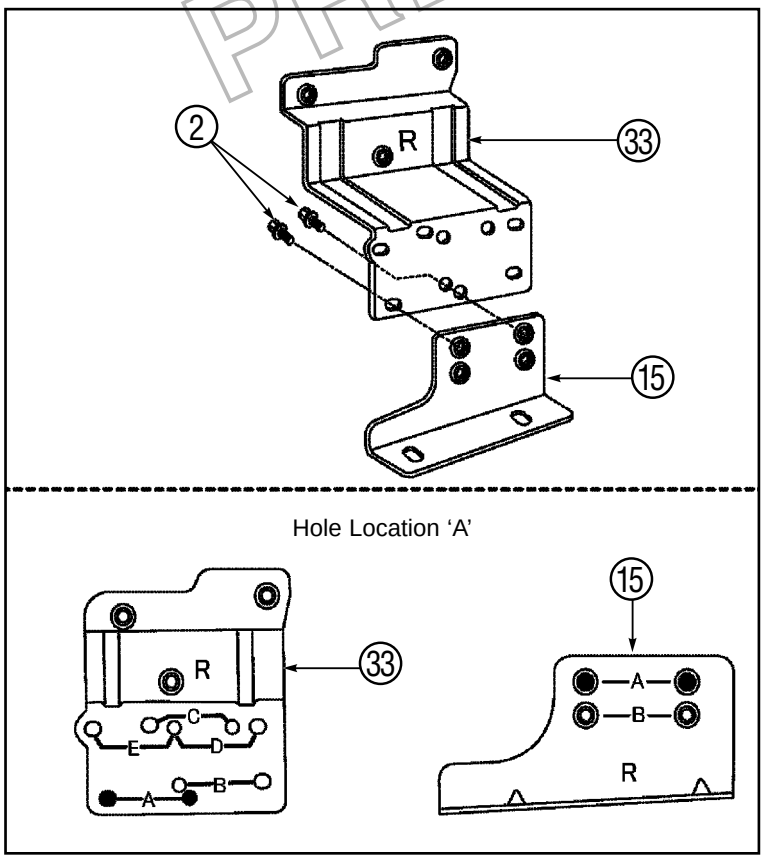

Fig. 36

FOR CD- AND MD-CHANGER INSTALLATION

7. Fit the sub bracket (R) ⑮ to the side bracket (R) ㉝.
   ②: Bolt (M5x9) (2x)

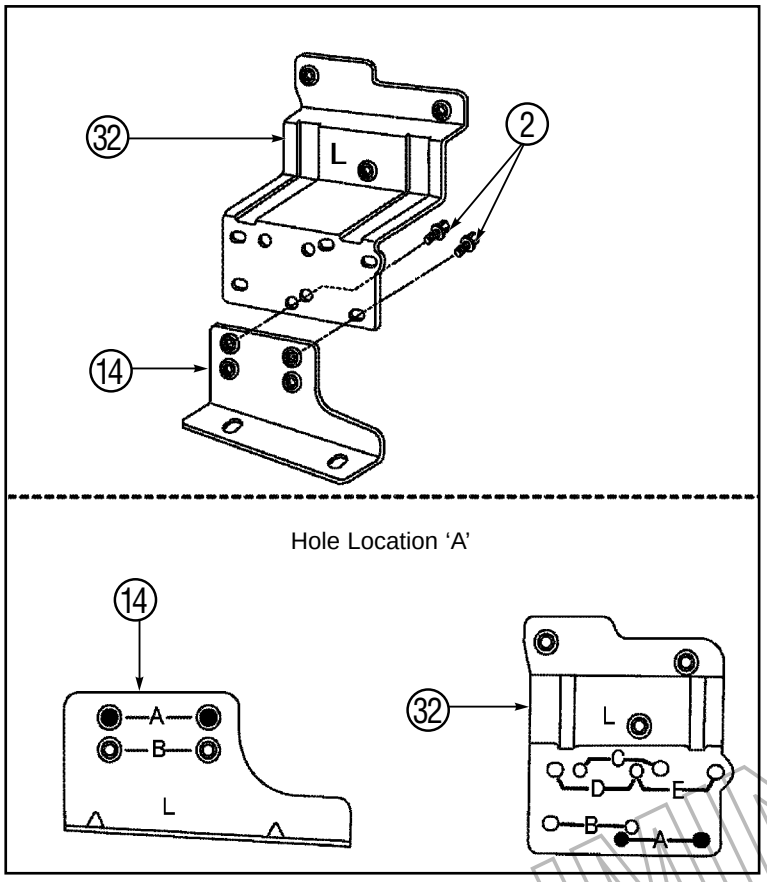

Fig. 37

8. Fit the sub bracket (L) ⑭ to the side bracket (L) ㉜.
   ②: Bolt (M5x9) (2x)

PRELIMINARY

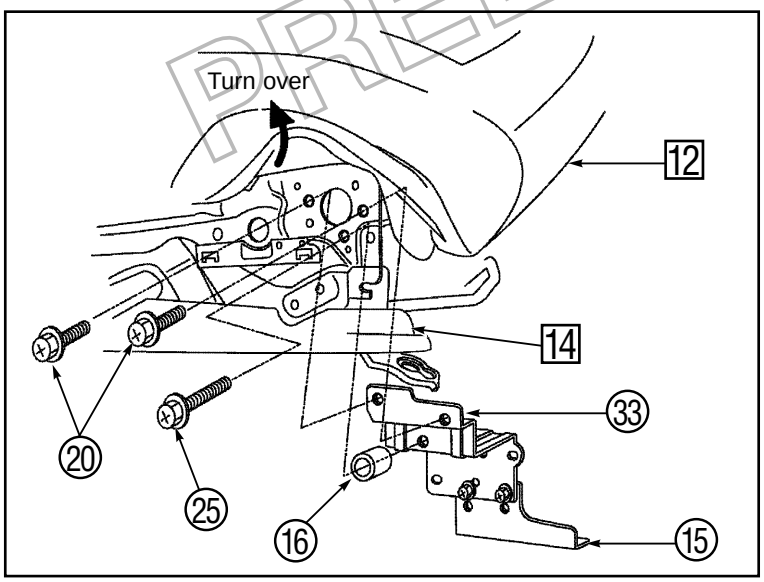

Fig. 38

9. Fit the sub bracket (R) ⑮, side bracket (R) ㉝ and spacer ⑯ onto the passenger's seat 12 right hand.
   ⑳: Bolt (M6x12) (2x)
   ㉕: Bolt (M6x25) (1x)
   Replace the side cover (R) 14 onto the passenger's seat 12 right hand.

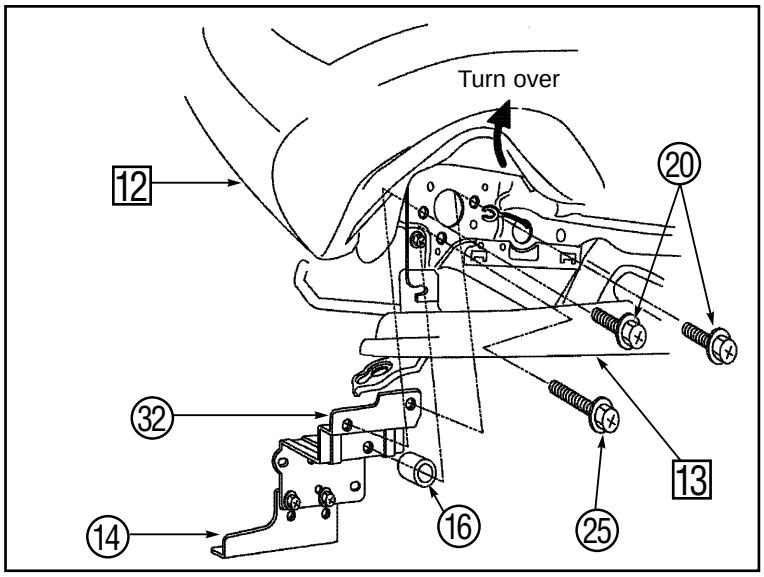

Fig. 39

10. Fit the sub bracket (L) ⑭, side bracket (L) ㉜ and spacer ⑯ onto the passenger's seat 12 left hand.
    ⑳: Bolt (M6x12) (2x)
    ㉕: Bolt (M6x25) (1x)
    Replace the side cover (L) 13 and knob 15 onto the passenger's seat 12 left hand.

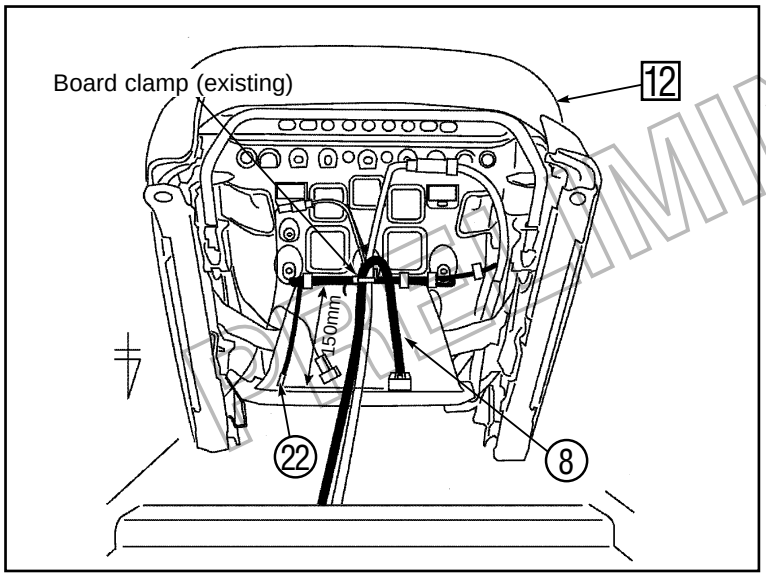

Fig. 40

11. Route the changer wire ⑧ and ground wire ㉒ **(ground wire: only in case of MD-changer)**.

PRELIMINARY

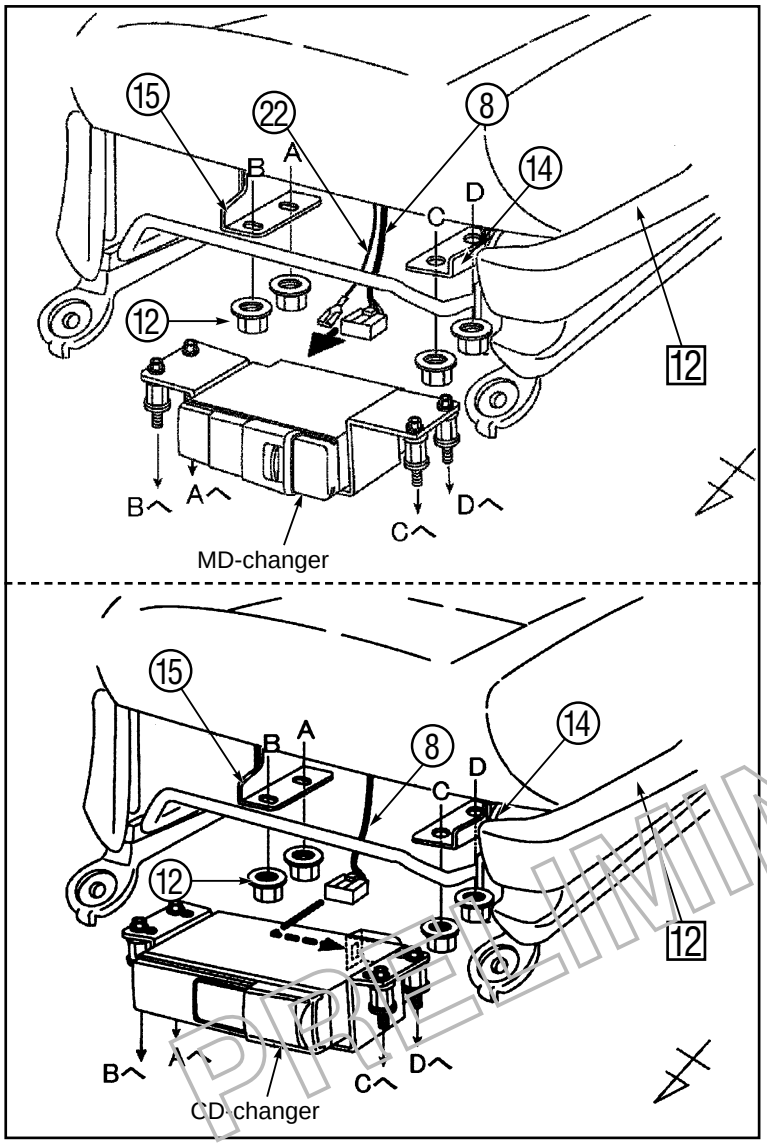

Fig. 41

12. Connect the changer wire ⑧ and the ground wire ㉒ **(ground wire: only in case of MD-changer)** to the changer-unit.
    ⑫: Nut (M6) (4x)

PRELIMINARY

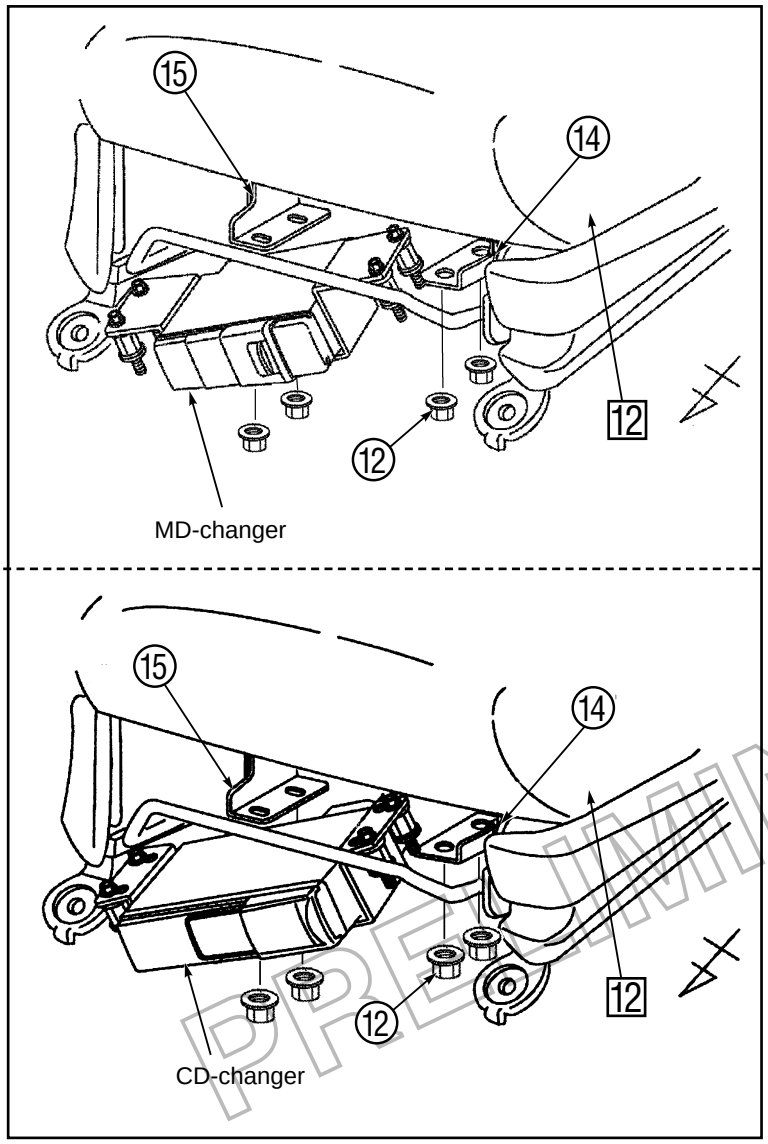

Fig. 42

13. Fit the changer-unit to the sub brackets ⑭+⑮, under the passenger's seat 12 using nuts ⑫.
    ⑫: Nut (M6) (4x)

PRELIMINARY

REFIT THE REMOVED PARTS.

4.2.2 IN THE LUGGAGE AREA

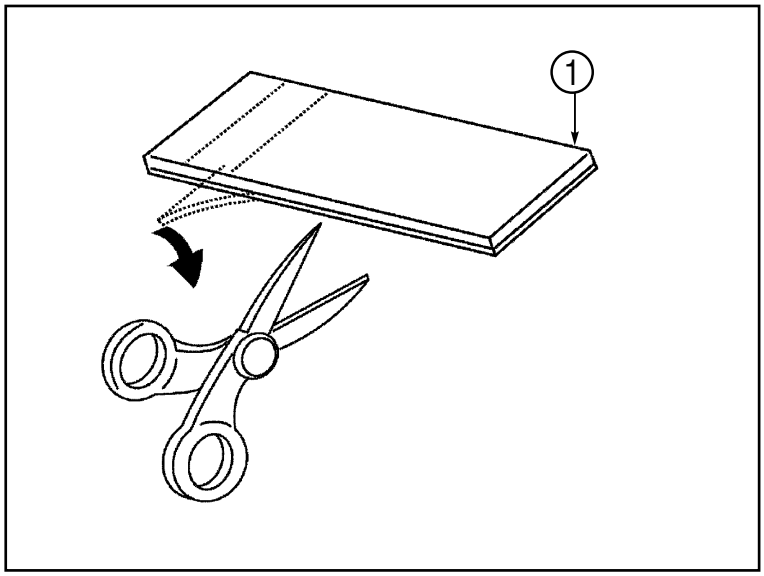

Fig. 43

1. Cut the tape ⑦ (10 pieces).

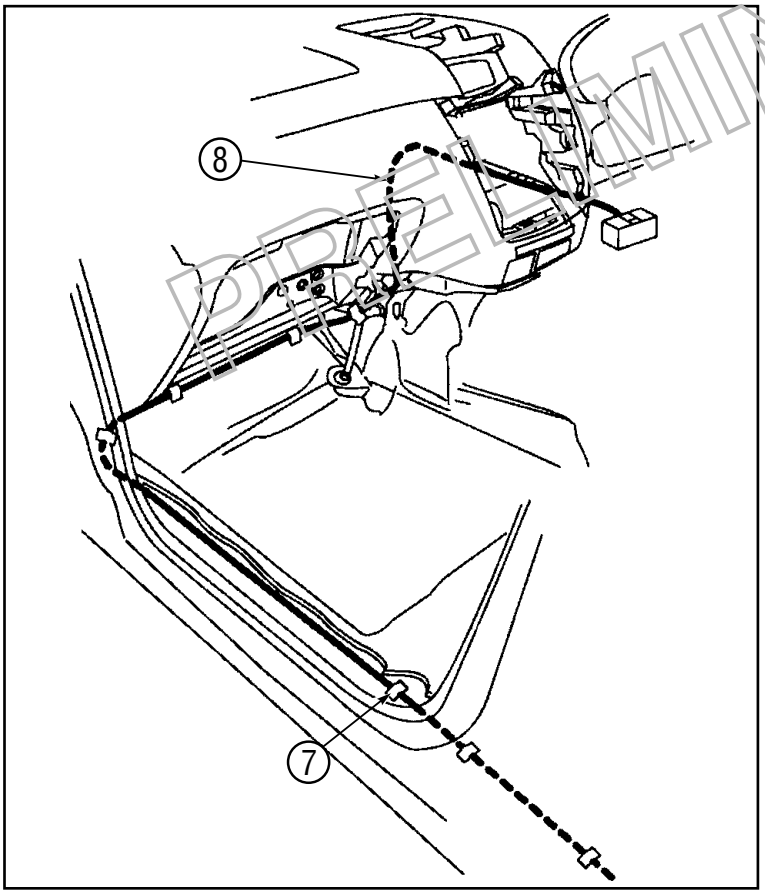

Fig. 44

2. Route and attach the changer wire ⑧ as shown using tape ⑦ (5x).

PRELIMINARY

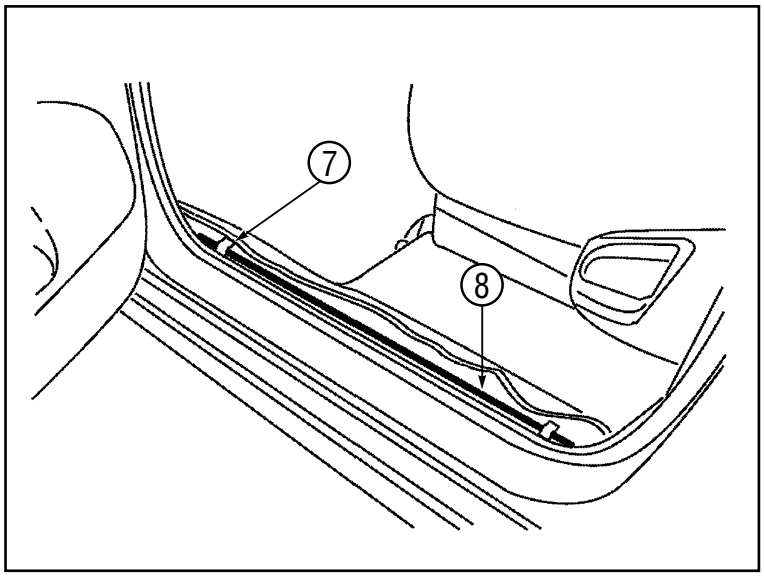

Fig. 45

3. Route and attach the changer wire ⑧ along the passenger's side back door using tape ⑦ (2x).

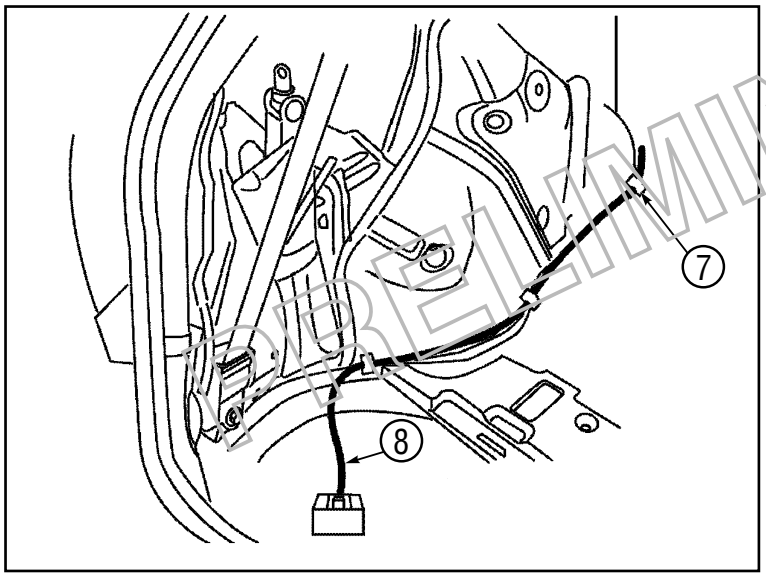

Fig. 46

4. Route and attach the changer wire ⑧ as shown using tape ⑦ (3x).

PRELIMINARY

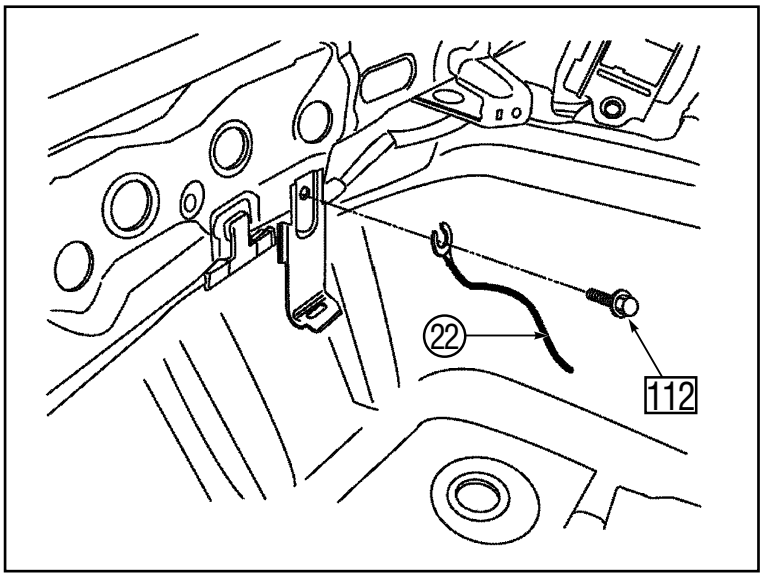

Fig. 47

ONLY FOR MD-CHANGER INSTALLATION

5. Attach the ground wire ㉒.
   112 : Bolt (1x)

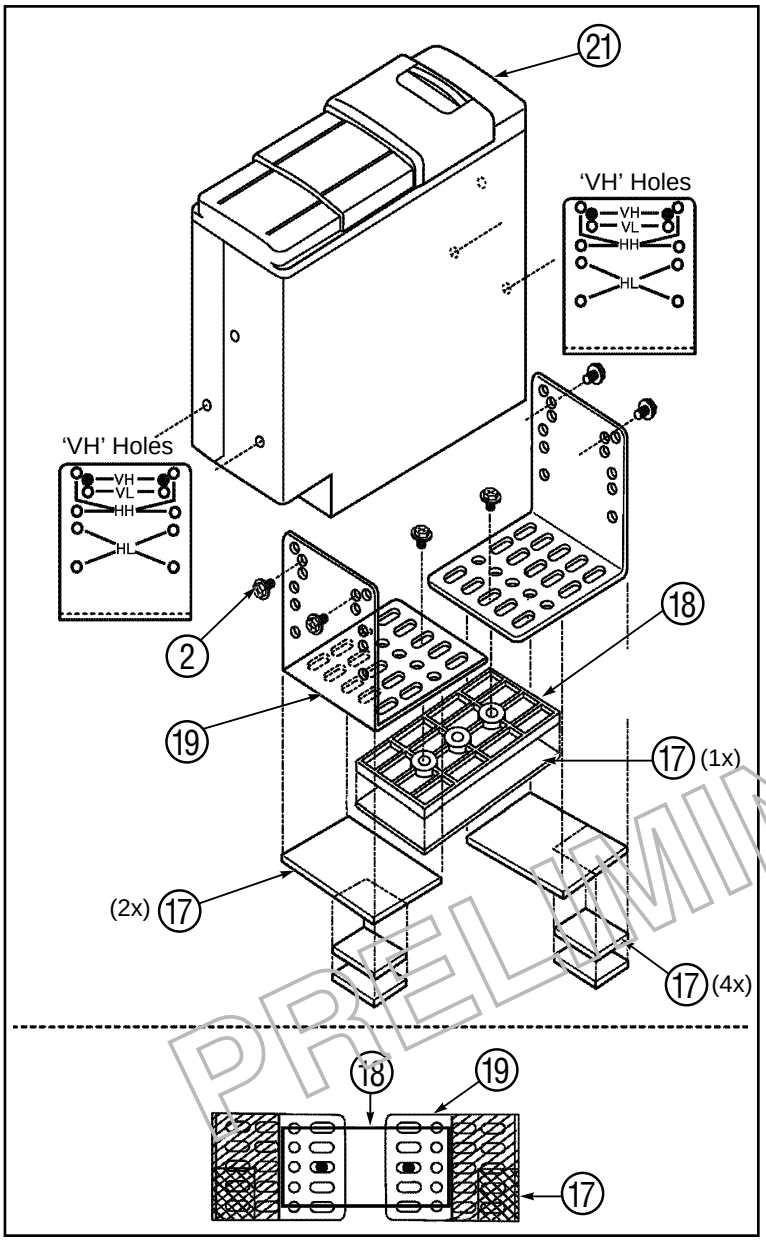

Fig. 48

FOR MD-CHANGER INSTALLATION

6. Attach the tapes ⑰,spacer ⑱ and side brackets ⑲ (2x) to the MD-changer ㉑.
   ②: Bolt (M5x9) (6x)
   ⑰: Tape
   (1x)
   (2x) Cut to size 67 x 40mm
   (4x) Cut to size 25 x 30mm
   ⑱: Spacer with nut (1x)

PRELIMINARY

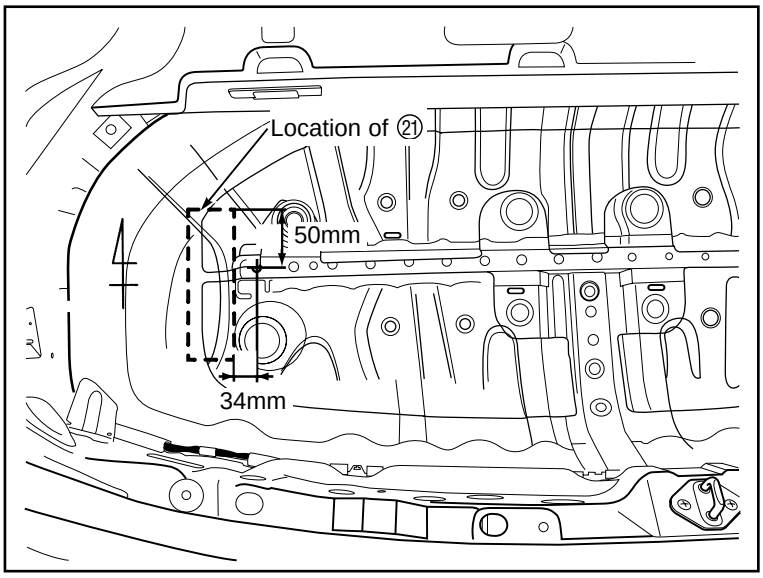

Fig. 49

7. Location of the MD-changer ㉑.

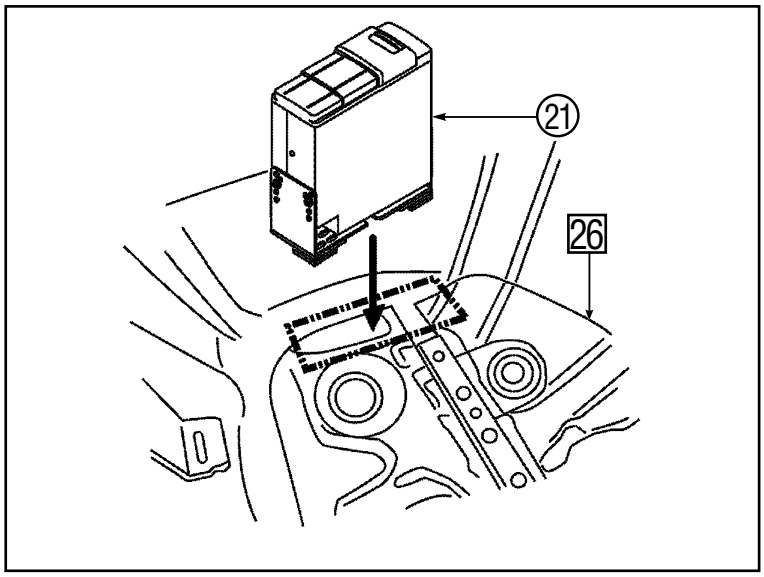

Fig. 50

8. Attach the MD-changer ㉑ to the luggage floor 26.

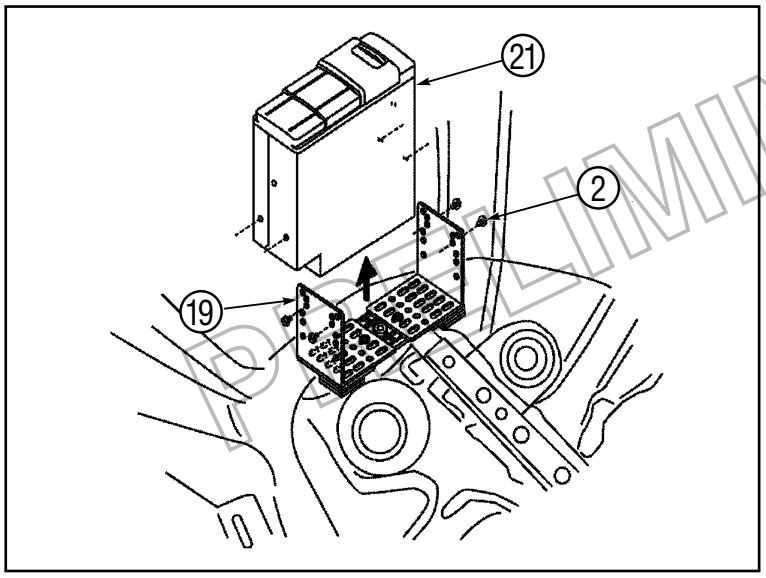

Fig. 51

9. Remove the MD-changer ㉑ from the side brackets ⑲ (2x).
   ②: Bolt (M5x9) (4x)

PRELIMINARY

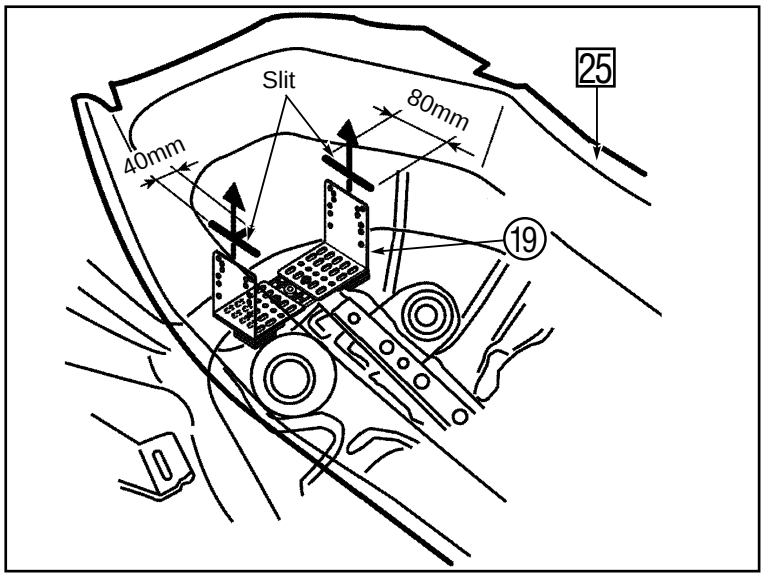

Fig. 52

10. Cut the luggage floor trim 25 as shown in the illustration.

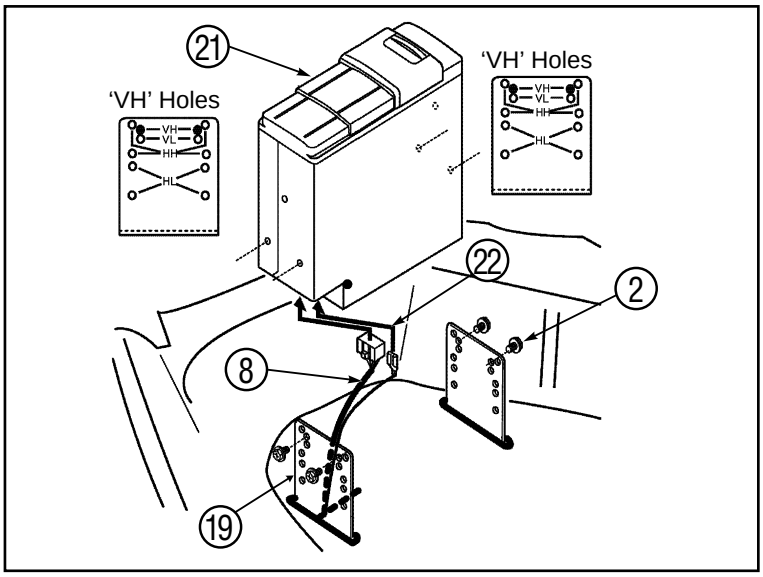

Fig. 53

11. Fit the MD-changer ㉑ between the brackets ⑲ (2x).
    ②: Bolt (M5x9) (4x)
    Connect the changer wire ⑧ and ground wire ㉒ to the MD-changer ㉑.

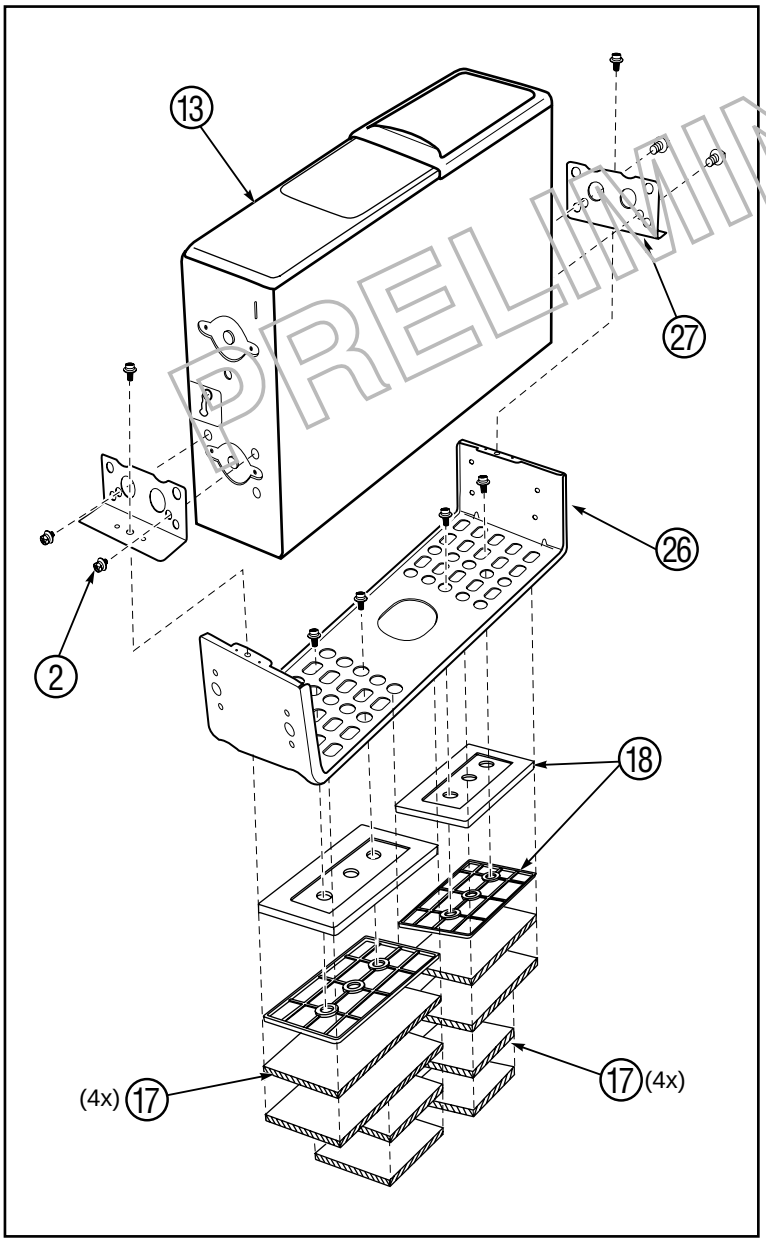

Fig. 54

FOR CD-CHANGER INSTALLATION

6. Atach the tapes ⑰, spacers ⑱ (4x), base bracket ㉖ and sub brackets ㉗ (2x) to the CD-changer ⑬.
   ②: Bolt (M5x9) (6x)
   ⑰: Tape
   (4x)
   (4x) Cut to size 67 x 40mm
   ⑱: Spacer with nut (4x)

PRELIMINARY

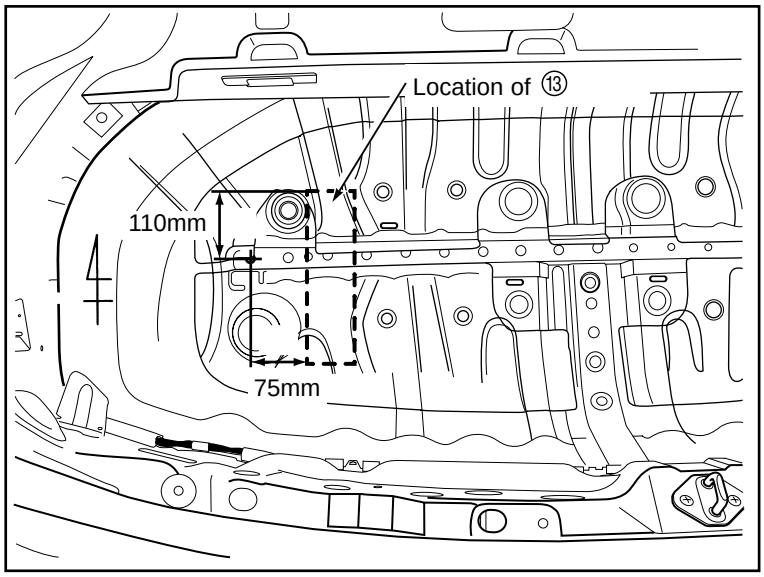

Fig. 55

7. Location of the CD-changer ⑬.

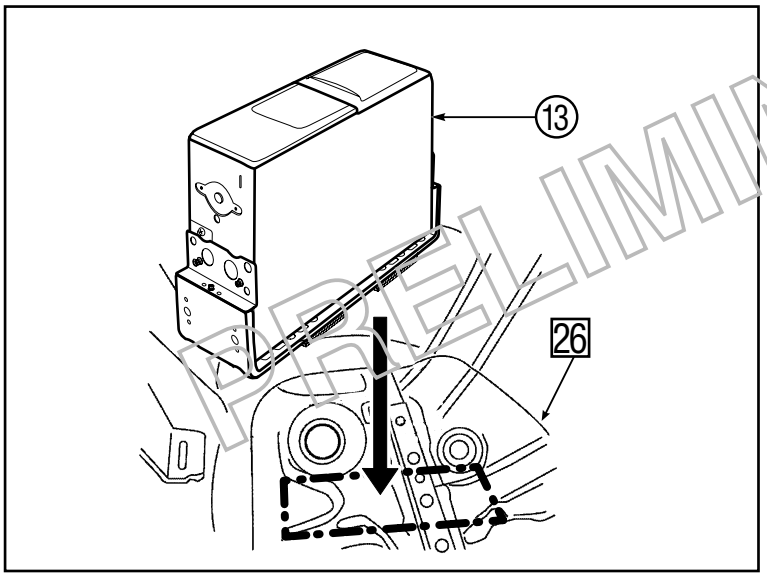

Fig. 56

8. Attach the CD-changer ⑬ to the luggage floor 26.

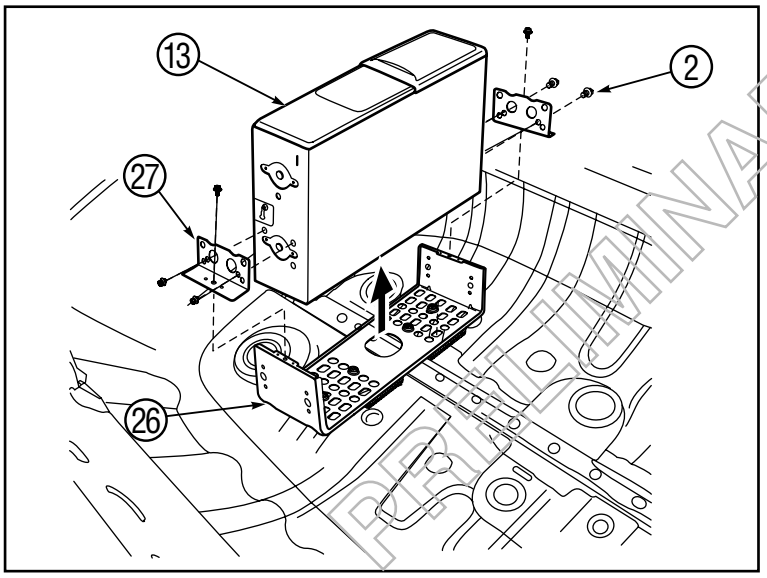

Fig. 57

9. Remove the CD-changer ⑬ from the brackets ㉖+㉗.
②: Bolt (M5x9) (6x)

PRELIMINARY

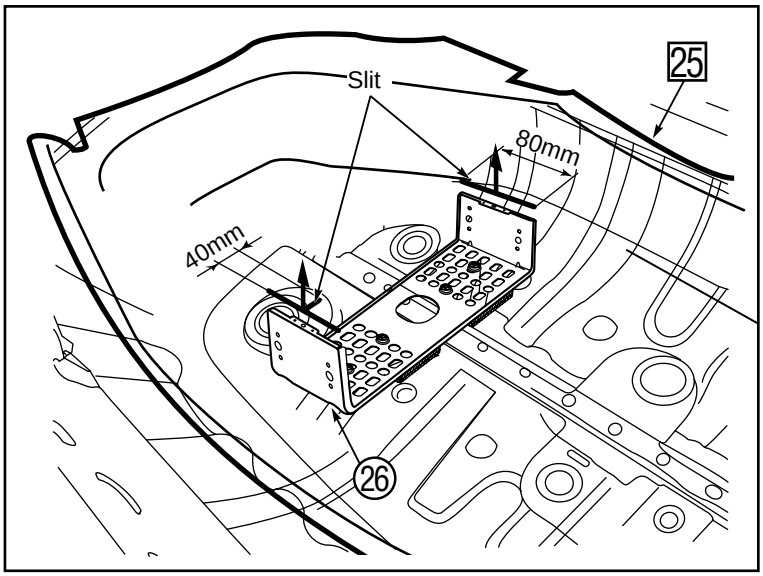

Fig. 58

10. Cut the luggage floor trim 25 as shown in the illustration.

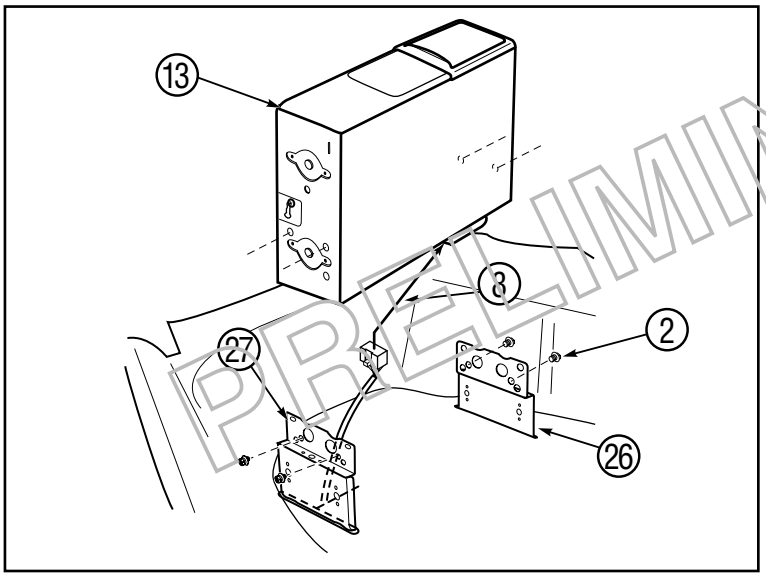

Fig. 59

11. Fit the CD-changer ⑬ between the brackets ㉗ (2x).
    ②: Bolt (M5x9) (4x)
    Connect the changer wire ⑧ to the CD-changer ⑬.

REFIT THE REMOVED PARTS.

PRELIMINARY

4.3 SUBWOOFER INSTALLATION

4.3.1 HANGING UNDER THE PASSENGER'S SEAT

NOTE:
The subwoofer is to be installed hanging under the passenger's seat. The additional fitting kit (PZ425-50240-00) is required.

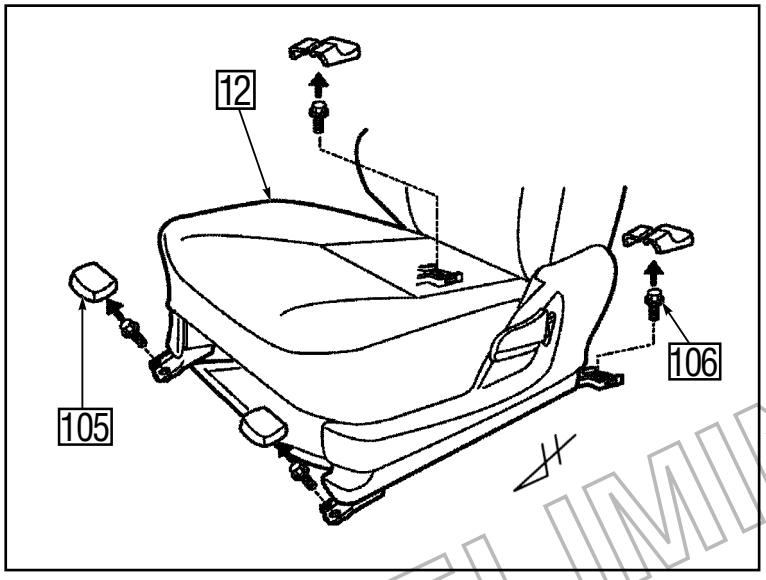

Fig. 60

1. Remove the passenger's seat 12.
   105: Cover (4x)
   106: Bolt w/ washer (4x)

CAUTION:
Fasten the bolt with specified torque when reassembling.

PRELIMINARY

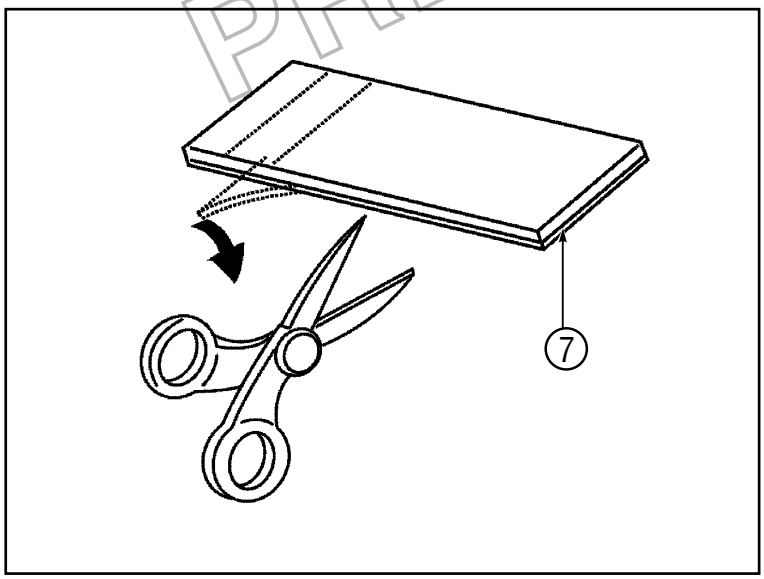

Fig. 61

2. Cut the tape ⑦ (10 pieces).

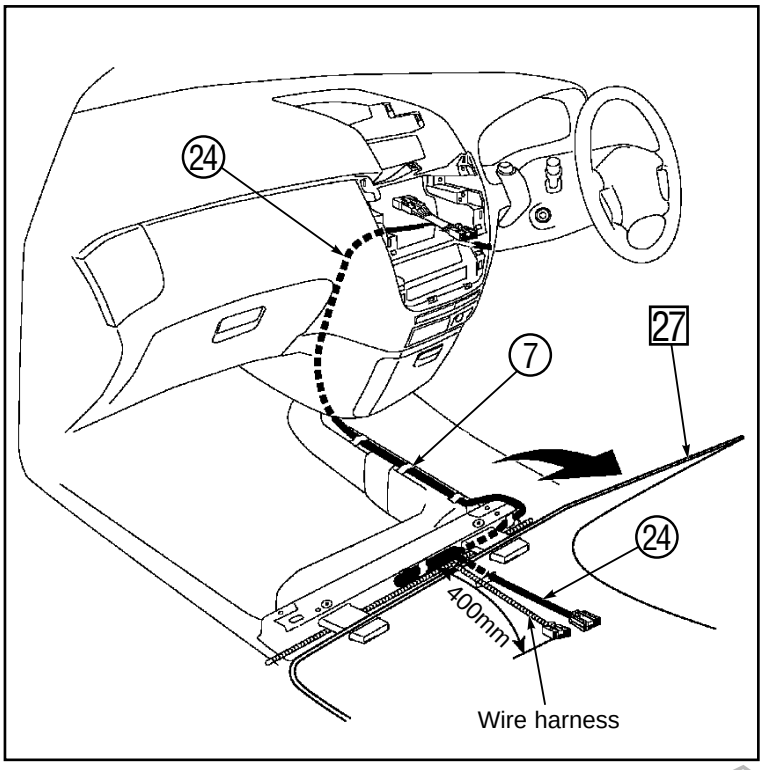

Fig. 62

3. Fold up the floor carpet 27.
   Route and attach the subwoofer wire ⑧ harness using tape ⑦ (5x).

PRELIMINARY

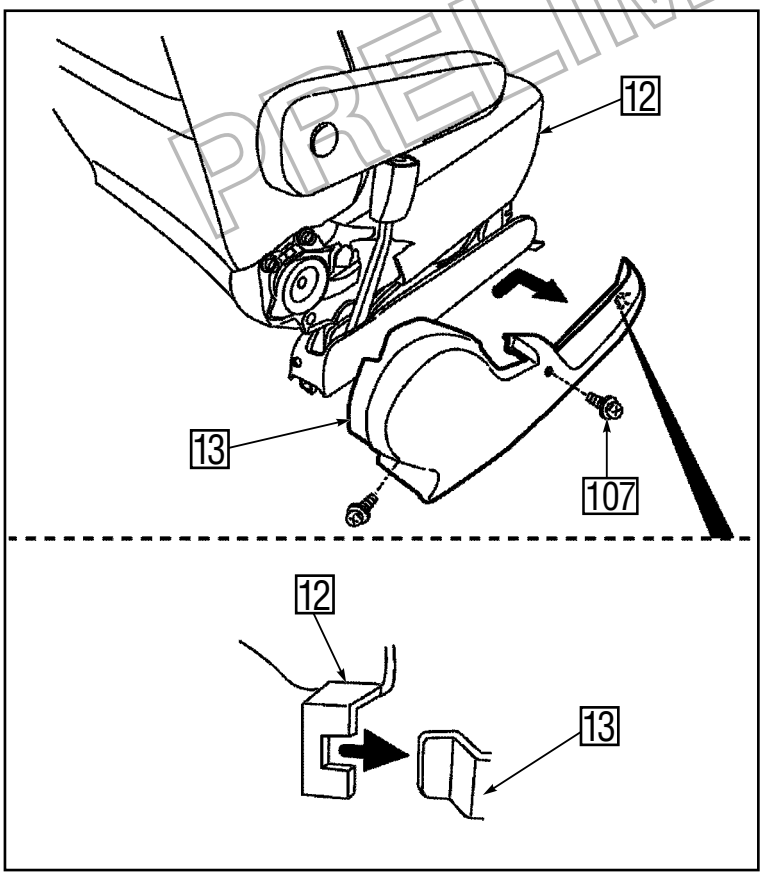

Fig. 63

4. Remove the side cover (R) 13 of the passenger's seat 12.
   107: Screw (2x)

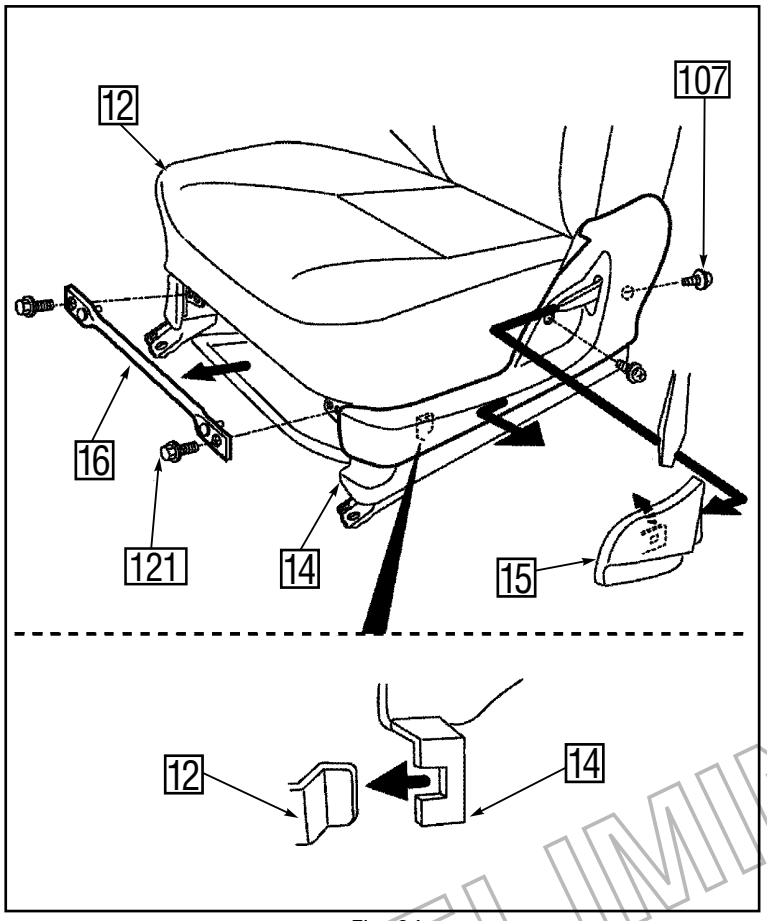

Fig. 64

5. Remove the knob 15 and side cover (L) 14 of the passenger's seat 12. Remove the reinforcement bar 16.
   107: Screw (4x)
   121: Bolt w/ washer (2x)

PRELIMINARY

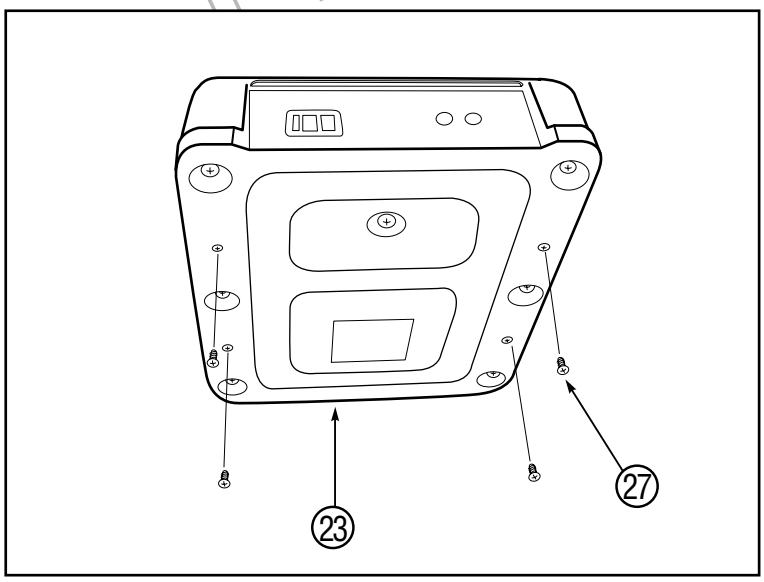

Fig. 65

6. Remove 4 screws ㉗ from the sub-woofer ㉓.
   ㉗: Screw (4x)

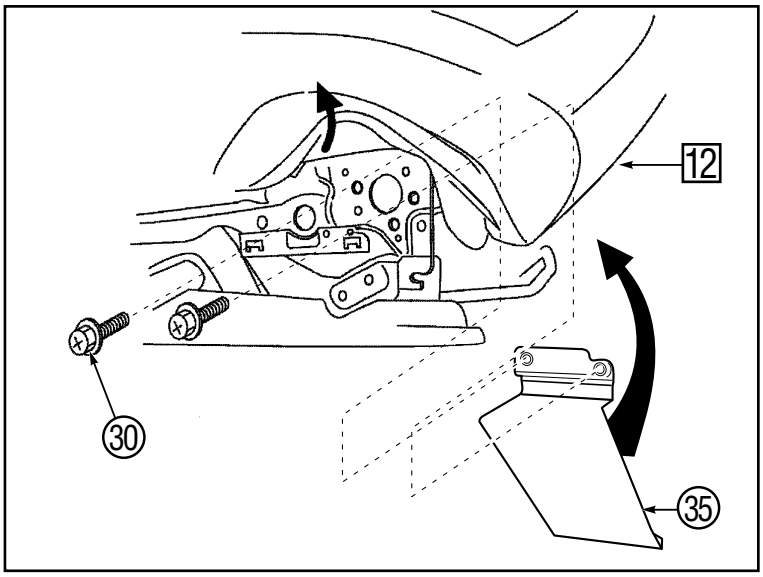

Fig. 66

7. Fit the side bracket (R) ㉟ to the passenger's seat 12 right hand.
   ㉚ : Bolt (2x)

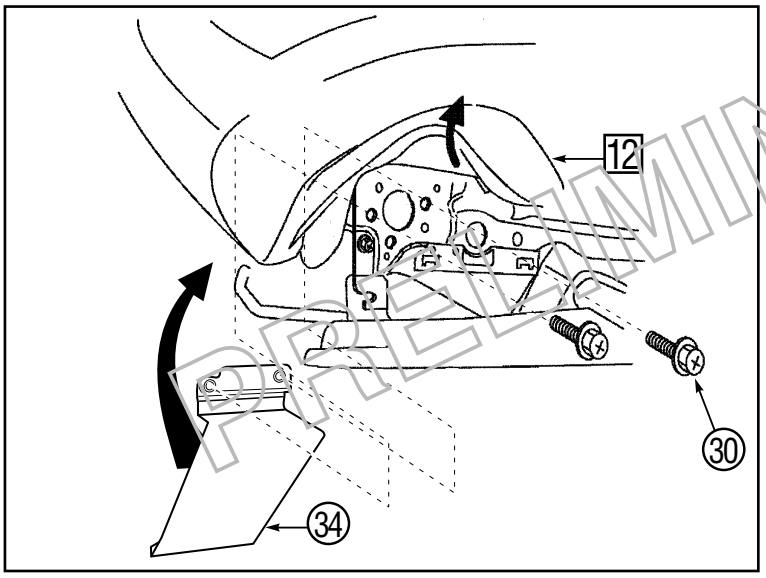

Fig. 67

8. Fit the side bracket (L) ㉞ to the passenger's seat 12 left hand.
   ㉚ : Bolt (2x)

PRELIMINARY

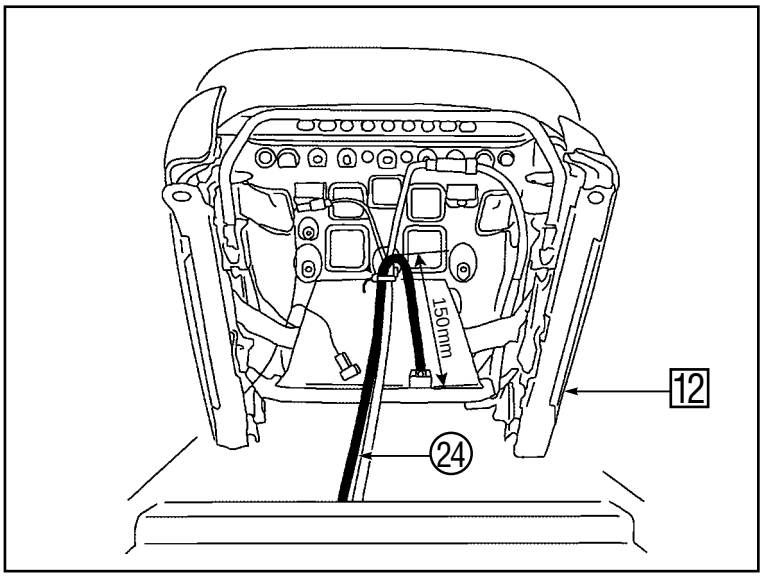

Fig. 68

9. Route the subwoofer wire ㉔ under the passenger's seat 12.

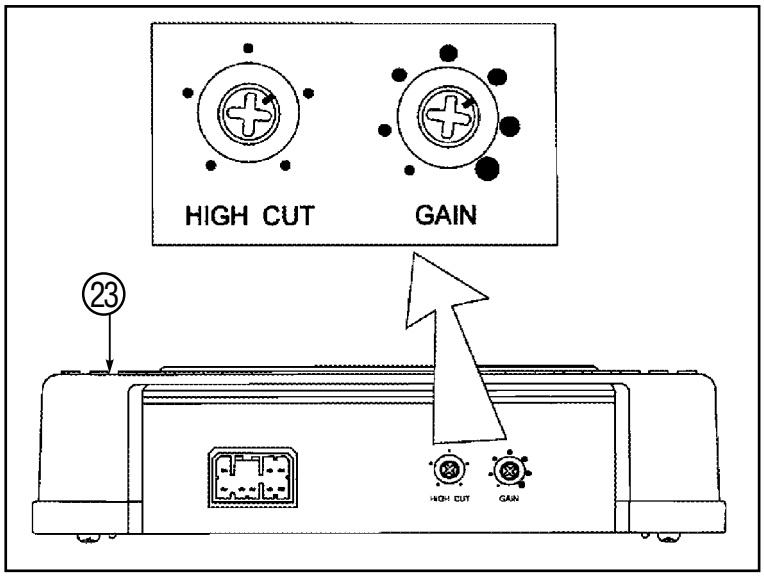

Fig. 69

10. Before installing the subwoofer ㉓ adjust the sensitivity to the correct position.

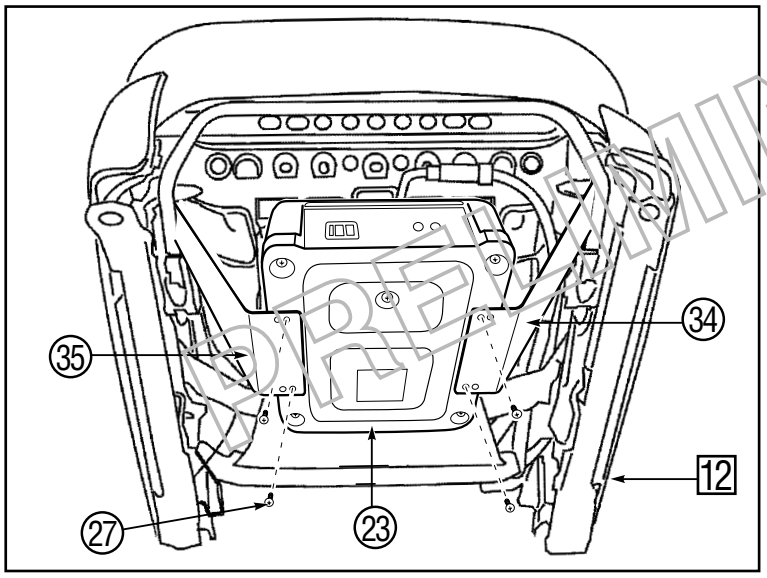

Fig. 70

11. Fit the subwoofer ㉓ to the attached side brackets ㉞+㉟ under the passenger's seat 12 using screws ㉗.
㉗: Screw (4x)

PRELIMINARY

REFIT THE REMOVED PARTS

9. OUTSIDE TEMPERATURE SENSOR INSTALLATION

NOTE:
Please check first whether the prewired connector is available. If it is not available fitting of the thermistor is impossible.

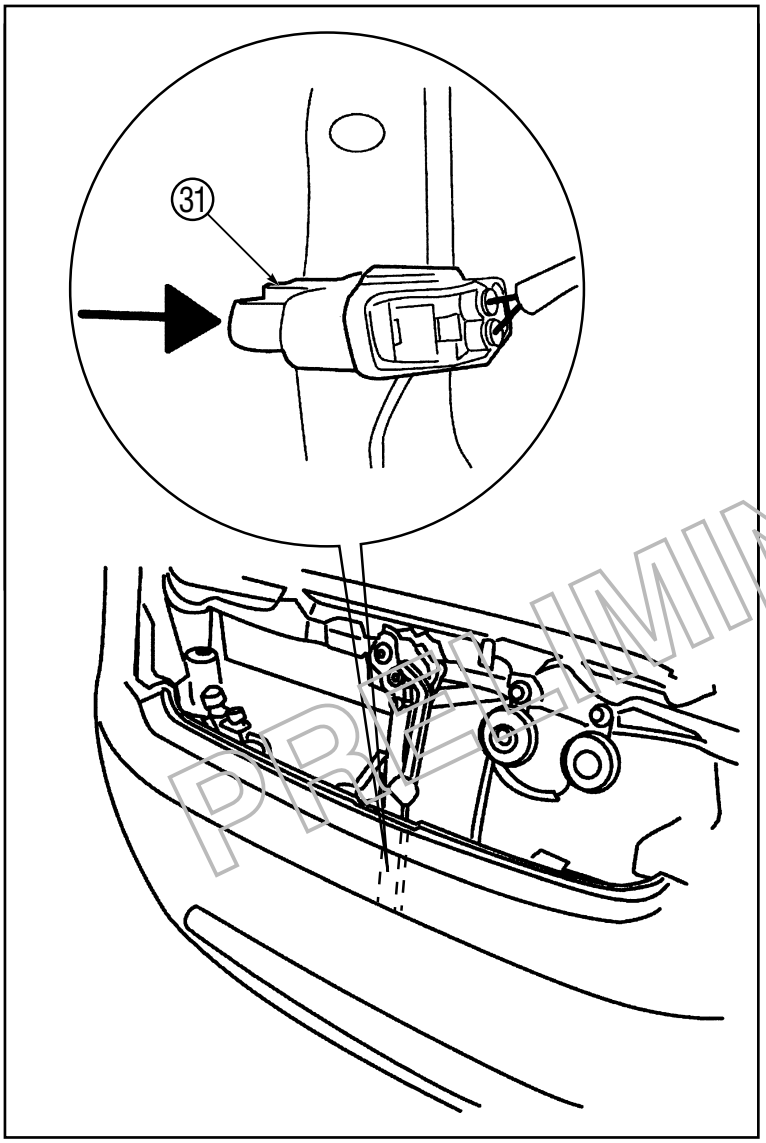

Fig. 71

1. Attach the temperature sensor ㉛.

PRELIMINARY

NOTES

PRELIMINARY

PRELIMINARY

TOYOTA
GENUINE PARTS